ETA-Danmark A/S
Göteborg Plads 1
DK-2150 Nordhavn
Tel. +45 72 24 59 00
Fax +45 72 24 59 04
Internet www.etadanmark.dk

Authorised and notified according to Article 29 of the Regulation (EU) No 305/2011 of the European Parliament and of the Council of 9 March 2011

MEMBER OF EOTA

European Technical Assessment ETA-19/0175 of 2023/09/19

I GENERAL PART

Technical Assessment Body issuing the ETA and designated according to Article 29 of the Regulation (EU) No 305/2011: ETA-Danmark A/S

Trade name of the construction product:	fischer PowerFast II screws fischer PowerFast II – Chipboard screws fischer PowerFast II – Wood Construction screws
Product family to which the construction product belongs:	Screws for use in timber constructions
Manufacturer:	fischerwerke GmbH & Co. KG Klaus-Fischer-Straße 1 DE-72178 Waldachtal Phone: +49 7443 120 www.fischer.de
Manufacturing plant:	fischerwerke
This European Technical Assessment contains:	78 pages including 11 Annexes which form an integral part of the document
This European Technical Assessment is issued in accordance with Regulation (EU) No 305/2011, on the basis of:	European Assessment Document (EAD) EAD 130118-01-0603 “Screws and threaded rods for use in timber constructions”
This version replaces:	The ETA with the same number issued on 2021-08-09

Translations of this European Technical Assessment in other languages shall fully correspond to the original issued document and should be identified as such.

Communication of this European Technical Assessment, including transmission by electronic means, shall be in full (excepted the confidential Annex(es) referred to above). However, partial reproduction may be made, with the written consent of the issuing Technical Assessment Body. Any partial reproduction has to be identified as such.

CONTENT

I GENERAL PART…… 1
II SPECIFIC PART OF THE EUROPEAN TECHNICAL ASSESSMENT…… 7
1 Technical description of the product and intended use…… 7
2 Specification of the intended use in accordance with the applicable EAD…… 8
3 Performance of the product and references to the methods for its assessment…… 9
3.1 Mechanical resistance and stability (BWR1)…… 9
3.2 Safety in case of fire (BWR2)…… 9
3.4 Safety and accessibility in use (BWR4)…… 9
3.8 Method of verification…… 10
3.9 General aspects related to the performance of the product…… 10
4 Attestation and verification of constancy of performance (AVCP) system applied, with reference to its legal base…… 11
5 Technical details necessary for the implementation of the AVCP system, as foreseen in the applicable EAD…… 11
Annex A:
fischer PowerFast II – Chipboard screws
Dimensions and Materials…… 12
A1 Countersunk head with full- or partial thread…… 12
A2 Raised countersunk head with full- or partial thread…… 13
A3 Pan head with full- or partial thread…… 14
A4 Chipboard screw with clamping effect…… 15
A5 Flange head with full- or partial thread…… 16
A6 Step countersunk head with full- or partial thread…… 17
fischer PowerFast II – Wood Construction screws
Dimensions and Materials…… 18
A7 Countersunk head with full- or partial thread…… 18
A8 Flange head with full- or partial thread…… 19
A9 Step Countersunk head with full- or partial thread…… 20
A10 Hexagon head with full- or partial thread…… 21
A11 Hexagon head with washer and full- or partial thread…… 22
A12 FAFS-Clip of adjustable frame screw…… 23
A13 Washers…… 24
Annex B:
Specifications of the intended use of fischer PowerFast II screws…… 25
B1 Materials for the intended use…… 25
B2 Materials for the intended use…… 26
B3 Specifications of the intended use – Design…… 27
B4 Specifications of the intended use – Installation …… 28
B5 Minimum timber cross sections, end- and edge distances – notations for ST and PL …… 29
B6 Minimum distances and spacings, laterally loaded screws
Materials: ST-c, FST-c, GST-c, GLT-c, BGLT-c…… 30
Minimum timber cross sections, end- and edge distances, axially loaded screws
Materials: ST-c, FST-c, GST-c, GLT-c, BGLT-c…… 30
B7 Minimum timber cross sections, end- and edge distances – notations for CLT…… 31
B8 Minimum distances and spacings, laterally and axially loaded screws
Material: CLT…… 32
Annex C:
Performance of fischer PowerFast II screws and references to the methods used for its assessment…… 33
C1 Characteristic values of the screws…… 33

CONTENT

Annex D:
fischer PowerFast II screws for the structural use in timber constructions……... 34
D1 1 Mechanical Resistance and Stability……..... 34
D2 1.1 Lateral load-carrying capacity $F_{v,Rk}$……. 35
1.1.1 Embedment strength $f_{h,\varepsilon,k}$, Materials: ST-c/d, FST-c/d, GST-c/d, BGLT, GLT-c….. 35
D3 1.1.2 Embedment strength $f_{h,k}$, Material: CLT……..……..... 36
1.1.3 Embedment strength $f_{h,\beta,\varepsilon,k}$, Material: LVL-c…….. 36
D4 1.1.4 Embedment strength $f_{h,\alpha,\beta,k}$, Material: LVL-d……..……... 37
D5 1.1.5 Embedment strength $f_{h,k}$, plane surface
Materials: OSB, HB, MB, SB, PLY, RPB…….……. 38
D6 1.1.6 Embedment strength $f_{h,k,}$ edge face
Materials: OSB, HB, MB, SB, PLY, RPB…….……. 39
D7 1.1.7 Embedment strength $f_{h,k}$ for the use in combination with predrilled steel plates…… 40
1.1.8 Effective number of laterally loaded screws each row n_{ef}……..... 40
D8 Effective number of laterally loaded screws each row n_{ef}……..... 41
D9 1.2 Axial resistance of the screw under tension $F_{ax,t,Rd}$……. 42
1.2.1 Withdrawal capacity $F_{ax,\alpha,Rk}$
Materials: ST-c, FST, GST, GLT-c, BGLT…….……... 42
D10 1.2.2 Withdrawal capacity $F_{ax,\alpha,Rk}$
Materials: ST-d, GLT-d and LVL-d……..... 43
D11 Characteristic values of the withdrawal strength in Structural Timber of fischer PowerFast II – Chipboard screws in Softwood and Laminated veneer lumber according to ETA-14/0354, referred to l_{ef}……..……..... 44
Characteristic values of the withdrawal strength in Structural Timber of fischer PowerFast II – Wood Construction screws in Softwood and Laminated veneer lumber according to ETA-14/0354, referred to l_{ef}……..……..... 44
D12 Characteristic values of the withdrawal strength in Structural Timber of fischer PowerFast II – Wood Construction screws in Softwood and Laminated veneer lumber according to ETA-14/0354, referred to $l_{g,}$……..……..... 45
Characteristic values of the withdrawal strength of fischer PowerFast II – Chipboard screws in the plane surface of derived wood panels……..……... 45
D13 Characteristic values of the withdrawal strength of fischer PowerFast II – Chipboard screws in edge surface of derived wood panels……..……..... 46
D14 1.2.3 Withdrawal capacity $F_{ax,Rk}$, Material: CLT……..... 47
D15 1.2.4 Effective number of axially loaded screws n_{ef}…… 48
D16 1.3 Head pull-through capacity $F_{head,Rk}$……. 49
1.3.1 Head pull-through parameter $f_{head,k}$
Materials: ST-c, FST, GST, GLT-c, BGLT, CLT, WFB, WPB…….…… 49
D17 Head pull-through parameter $F_{head,k}$ of Screws with clamping effect and FAFS-Clip, Materials: ST-c, FST, GST, GLT-c, BGLT, CLT, SWP-P……..… 50
D18 1.4 Compression capacity
Materials: ST, FST, GST, GLT-c, BGLT, LVL-c…….. 51
D19 Buckling capacities of screws with free span length……... 52
D20 1.5 Combined laterally and axially loaded screws……..... 53
D21 1.6 Slip modulus in the Serviceability Limit State…… 54
1.6.1 Laterally loaded screws…….. 54
1.6.2 Axially loaded screws……. 54
D22 1.7 Slip modulus in the Ultimate Limit State…… 55
1.7.1 Laterally loaded screws……..…… 55
D23 1.7.2 Axially loaded screws……..…….. 56

CONTENT

Annex E (informative):
Applications of fischer PowerFast II screws –
Fixation of on-roof insulations…… 57
E1 Fixations of on-roof insulation system for sufficiently compression resistant insulations….. 57
E2 Fixations of on-roof insulation system for sufficiently compression resistant insulations….. 58
E3 Point loads F_{Ed} perpendicular to the battens by the screws……..…… 59
E4 Design of the battens……. 60
E5 Design of the thermal insulation…….…….. 61
E6 Design of predominantly axially loaded screws……... 62
E7 Design of predominantly laterally loaded screws…… 63
Annex F (informative)
Applications of fischer PowerFast II screws –
FAFS-Clip of adjustable frame screw: Installation of ceilings or technical shells……. 64
F1 FAFS-Clip of adjustable frame screw:
Installation of ceilings or technical shells, overview and application…….. 64
F2 FAFS-Clip of adjustable frame screw:
Installation of ceilings or technical shells, structural design….……..……. 65
Annex G (informative)
Applications of fischer PowerFast II screws –
Façade and Installation Systems….……..……. 66
G1 Examples of different Façade Systems BWM…….…… 66
G2 Examples of Installation Systems for different mounting channels….…… 67
G3 Examples of Installation Systems for different mounting channels….…… 68
Annex H (informative):
Applications of fischer PowerFast II screws –
Inclined screws with an angle of 45°……..... 69
H1 Inclined screws with an angle of 45° for the use in single shear plane
steel-to-timber connections…….……. 69
H2 Inclined screws for the use in single shear plane timber-to-timber connections…….. 70
Annex J (informative):
Applications of fischer PowerFast II screws –
Fire Design for the structural use in timber constructions according to EN 1995-1-2…….. 71
J1 Simplified rules for unprotected laterally loaded screws……. 71
J2 Simplified rules for protected laterally loaded screws……. 72
J3 Simplified rules for protected laterally loaded screws……. 73
J4 Simplified rules for protected axially loaded screws……...…..... 74
Annex K (informative):
Applications of fischer PowerFast II screws –
Screw Gluing methods……. 75
K1 Screw gluing methods……..……..... 75
K2 Screw gluing, ribbed panels……. 76
K3 Screw gluing, basic values……...…….……...……..... 77
K4 Screw gluing, calculation models……..…….…….. 78
Annex L (informative):
Applications of fischer PowerFast II screws –
Screw head supporting plate..…… 79
L1 Screw Head Supporting Plates……. 79

The document refers to the following standards and regulations:

EAD 130118-01-0603	Screws and threaded rods for use in timber constructions, EOTA 2019
EN 300:2006	Oriented Strand boards (OSB) – Definitions, classifications and specifications
EN 301:2023	Adhesives, phenolic and aminoplastic, for load-bearing timber structures - Classification and performance requirements
EN 312:2010	Particleboards – Specifications
EN 314-2:1997	Plywood - Bonding Quality – Requirements
EN 338:2016	Structural timber – Strength classes
EN 520:2010	Gypsum plasterboards – Definitions, requirements and test methods
EN 622-2:2006	Fibreboards – Specifications – Part 2: Requirements for hardboards
EN 622-3:2006	Fibreboards – Specifications – Part 3: Requirements for medium boards
EN 636:2016	Plywood – Specifications
EN 826:2013	Thermal insulating products for building applications – Determination of compression behaviour
EN 13501-1:2020	Fire classification of construction products and building elements – Part 1
EN 1912:2013	Structural Timber – Strength classes – Assignment of visual grades and species
EN 1990:2013	Eurocode – Basis of structural design
EN 1993-1-1:2014	Eurocode 3: Design of steel structures – Part 1-1: General rules and rules for buildings
EN 1993-1-8:2012	Eurocode 3: Design of steel structures – Part 1-8: Design of joints
EN 1995-1-1:2014	Eurocode 5: Design of timber structures – Part 1-1: General – Common rules and rules for buildings
EN 1995-1-2:2011	Eurocode 5: Design of timber structures – Part 1-2: General – Structural fire design
EN 1999-1-1:2014	Eurocode 9: Design of aluminium structures – Part1-1: General structural rules
EN 13353:2011	Solid wood panels (SWP) - Requirements
EN 13986:2015	Wood-based panels for use in construction – Characterisitcs, evaluation of conformity and marking
EN 14080:2013	Timber structures – Glued laminated timber and glued Solid Timber – Requirements
EN 14081-1:2019	Timber structures – Strength graded structural timber with rectangular cross section – Part 1: General requirements
EN 14374:2016	Timber structures – Laminated Veneer Lumber (LVL) – Requirements
EN 14592:2012	Timber Structures – Dowel-type fasteners - Requirements
EN 15283-2:2009	Gypsum boards with fibrous reinforcements – Definitons, requirements and test methods – Part 2: Gypsum fibre boards
EN 15425:2023	Adhesives – One component polyurethan (PUR) for load-bearing timber structures – Classifications and performance requirements
EN 15497:2014	Structural finger jointed Solid Timber – Performance requirements and minimum production requirements
EN ISO 7094:2000	Plain washers - Extra large series, product grade C
ETA-14/0354:2018	Pollmeier Furnierwerkstoffe GmbH

II SPECIFIC PART OF THE EUROPEAN TECHNICAL ASSESSMENT

1 Technical description of the product

»fischer PowerFast II – Chipboard screws and Wood Construction screws« are self-tapping screws to be used in timber structures. They shall be threaded over a part of the length or over the whole length. The screws are produced from a carbon steel wire. fischer »PowerFast II – Chipboard screws« have an outer thread diameter *d* (nominal diameter) between 3,0 mm and 6,0 mm. »fischer PowerFast II – Wood Construction screws« have a nominal diameter between 8,0 mm to 12,0 mm. Where corrosion protection is required, the material or coating shall be declared in accordance with the relevant specification given in Annex A of EN 14592.

They are zinc-plated (e.g. yellow-zinced or blue-zinced), bonus-zinc-coated, burnished, nickel-plated or brass-plated. The mean thickness of the zinc-plated screws is min. 5 µm.

The FAFS-Clip is made of zinc die cast for »fischer PowerFast II – Chipboard screws« with countersunk head and a diameter of 5,0 mm.

Product and product description are given in Annex A.

The characteristic material values, dimensions and tolerances of the »fischer PowerFast II« screws not indicated in Annexes shall correspond to the respective values laid down in the Technical Documentation of this European Technical Assessment (ETA).

Specifications of the product itself are given in Annex C. The screws are intended to be used with a minimum embedment depth (penetration length) given in Annex D. It is possible to consider the influences of the tip of the screws on the load-carrying capacities. The intended use and exemplary applications are also detailed in the Annex E to Annex K.

2 Specification of the intended use in accordance with the applicable European Assessment Document (hereinafter EAD)

The performances given in Section 3 are only valid if the »fischer PowerFast II« screws are used in compliance with the specifications and conditions given in Annex C.

The intended use of the screws is in timber connections for which all requirements of mechanical resistance, stability and safety in use in the sense of the Basic Works Requirements 1 and 4 of Regulation 305/2011 (EU) shall be fulfilled.

The provisions made in this European Technical Assessment are based on an assumed intended working life of the screws of 50 years.

The indications given on the working life cannot be interpreted as a guarantee given by the producer or Assessment Body, but are to be regarded only as a means for choosing the right products in relation to the expected economically reasonable working life of the products.

3 Performance of the product and references to the methods for its assessment

Characteristic	Assessment of characteristic
3.1 Mechanical resistance and stability (BWR1)	
Dimensions	See annex A
Characteristic yield moment	See annex C
Bending angle	See annex C
Characteristic withdrawal parameter	See annex D
Characteristic head-pull through parameter of screws	See annex D
Characteristic tensile strength	See annex C
Characteristic torsional strength	See annex C
Insertion moment	See annex C
Spacing, end and edge distances of the screws and minimum thickness of the timber material	See Annex B
Slip modulus for laterally and axially loaded screws	See annex D
Durability against corrosion	No performance assessed
3.2 Safety in case of fire (BWR2)	
Reaction to fire	The screws are considered to satisfy **Euroclass A1** in accordance with EN 13501-1 and Delegated Regulation 2016/364, according to EC Decision 96/603/EC.
3.3 Safety and accessibility in use (BWR4)	
Same as BWR 1	See aspects covered by BWR1
The intended use and exemplary applications are also detailed in the Annex E to Annex L	
See additional information in section 3.4 and 3.5	

3.4 Methods of verification

The assessment of the performance »fischer PowerFast II« screws in relation to the applicable BWR's has been made in accordance with the European Assessment Document (EAD) No. EAD 130118-01-0603 »Screws and threaded rods for use in timber constructions«.

Durability and serviceability

The screws have been assessed as having satisfactory durability and serviceability when used in timber structures using the timber species described in EN 1995-1-1 and subjected to the conditions defined by service classes 1 and 2.

3.5 General aspects related to the performance of the product

The European Technical Assessment is issued for the screws based on agreed data/information, deposited with ETA-Danmark, which identifies the product that has been assessed. Changes to the product or production process, which could result in this deposited data/information being incorrect, should be notified to ETA-Danmark before the changes are introduced. ETA-Danmark will decide if such changes affect the ETA and consequently the validity of the CE marking based on the ETA and if so whether further assessment or alterations to the ETA, shall be necessary.

The screws are manufactured in accordance with the provisions of the European Technical Assessment using the automated manufacturing process as identified during the inspection of the plant by the assessment body issuing the ETA and the notified body and laid down in the technical documentation. The installation shall be carried out in accordance with EN 1995-1-1 (Eurocode 5), or an appropriate national code unless, otherwise defined in this document.

4 Attestation and verification of constancy of performance (hereinafter AVCP) system applied, with reference to its legal base

4.1 AVCP system

According to the decision 97/176/EC of the European Commission, as amended, the system(s) of assessment and verification of constancy of performance (see Annex V to Regulation (EU) No 305/2011) is 3.

5 Technical details necessary for the implementation of the AVCP system, as foreseen in the applicable EAD

Technical details necessary for the implementation of the AVCP system are laid down in the control plan deposited at ETA-Danmark prior to CE-marking.

Issued in Copenhagen on 2023-09-19 by

Thomas Bruun
Managing Director, ETA-Danmark

PowerFast II – Chipboard screw - Countersunk head with full- or partial thread

Table A1.1: Screw Dimensions and Materials

Drawing

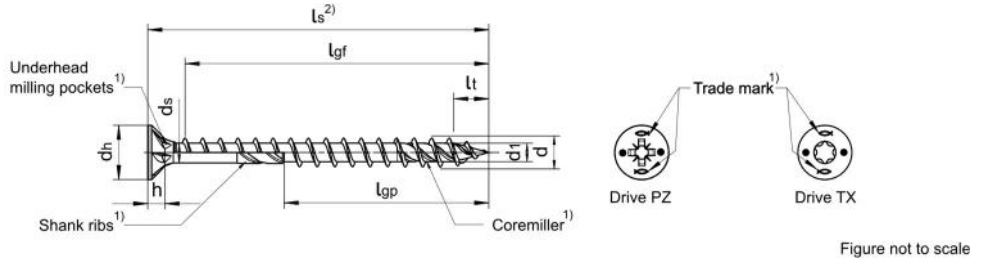

Materials and coatings

- Carbon Steel
- yellow zinc-plated, blue zinc-plated, blue zinc-plated ≥12 µm, bonus-zinc-coated, burnished, nickel plated, brass plated

Nominal diameter		**3,0**	**3,5**		**4,0**	**4,5**	**5,0**		**6,0**
d	Outer thread diameter	3,00	3,50		4,00	4,50	5,10		6,00
	Allowed deviation	± 0,25	± 0,25		± 0,30	± 0,30	± 0,30		± 0,30
d_1	Inner thread diameter	1,95	2,20		2,50	2,75	3,25		4,00
	Allowed deviation	± 0,18	± 0,18		± 0,20	± 0,20	± 0,20		± 0,30
d_h	Head diameter	6,00	7,00		8,00	8,80	9,80		11,80
	Allowed deviation	± 0,50	± 0,50		± 0,60	± 0,60	± 0,60		± 0,60
d_s	Shank diameter	2,25	2,60		2,90	3,20	3,70		4,30
	Allowed deviation	± 0,15	± 0,15		± 0,15	± 0,15	± 0,15		± 0,15
h	Head height	1,80	2,30		2,40	2,70	3,00		3,60
l_t	Length of the screw tip	-	-		-	-	-		7,30
	Drive TX	10	10	20	20	20	20	25	30
	Drive PZ	1	2		2	2	2		3

Nominal length		**Standard thread length | l_{gf} = Full thread | l_{gp} =Partial thread | Tolerance: ± 2,0[3)]**											
l_s		Allowed Deviations											
	$l_{s,min/max}$	l_{gf}	l_{gp}	l_{gf}	l_{gp}	l_{gf}	l_{gp}	l_{gf}	l_{gp}	l_{gf}	l_{gp}	l_{gf}	l_{gp}
20	l_s ±1,05	16		16									
25	l_s ±1,25	21	18	21	18	20	18	20					
30	l_s ±1,25	26	18	26	18	25	18	25	18	24			
35	l_s ±1,50	31	24	31	24	30	24	30	24	29	24	28	
40	l_s ±1,50	36	28	36	28	35	28	35	28	34	28	33	28
45	l_s ±1,50	41	30	41	30	40	30	40	30	39	30	38	30
50	l_s ±1,50			46	30	45	30	45	30	44	30	43	30
55	l_s ±1,75					50	36	50	36	49	36	48	36
in steps of 10 mm													
60	l_s ±1,75					55	36	55	36	54	36	53	36
70	l_s ±1,75						42	60	42	64	42	63	42
80	l_s ±1,75						45	75	45	74	45	73	45
90	l_s ±2,00										54		54
100	l_s ±2,00										60		60
110	l_s ±2,00										70		70
120	l_s ±2,00										70		70
130 - 300	l_s ± 3,00												70

All sizes in [mm]

- Screws with partial thread > 60 mm, l_s with shank ribs

2) Other screw lengths with l_s min ≤ l_s ≤ l_s max and other thread lengths l_{gf} resp. l_{gp} ≥ 4·d up to max, standard thread lengths are allowed

3) For 10 mm ≤ l_{gf} resp.,l_{gp} ≤ 18 mm → tolerance ±1,5 mm and for 18 mm < l_{gf} resp. l_{gp} ≤ 30 mm → tolerance ±1,7 mm

PowerFast II – Chipboard screw – Raised countersunk head with full- or partial thread

Table A2.1: Screw Dimensions and Materials

Drawing

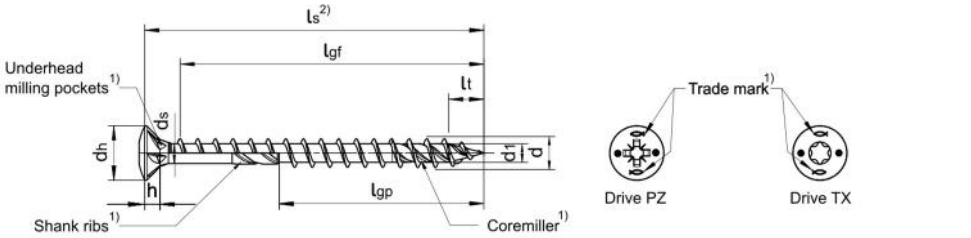

1)optional

Figure not to scale

Materials and coatings

- Carbon Steel
- yellow zinc-plated, blue zinc-plated, blue zinc-plated ≥12 µm, bonus-zinc-coated, burnished, nickel plated, brass plated

Nominal diameter		3,0	3,5	4,0	4,5	5,0	6,0
d	Outer thread diameter	3,00	3,50	4,00	4,50	5,10	6,00
	Allowed deviation	± 0,25	± 0,25	± 0,30	± 0,30	± 0,30	± 0,30
d_1	Inner thread diameter	1,95	2,20	2,50	2,75	3,25	4,00
	Allowed deviation	± 0,18	± 0,18	± 0,20	± 0,20	± 0,20	± 0,30
d_h	Head diameter	6,00	7,00	8,00	8,80	9,80	11,80
	Allowed deviation	± 0,50	± 0,50	± 0,60	± 0,60	± 0,60	± 0,60
d_s	Shank diameter	2,25	2,60	2,90	3,20	3,70	4,30
	Allowed deviation	± 0,15	± 0,15	± 0,15	± 0,15	± 0,15	± 0,15
h	Head height	1,80	2,30	2,40	2,70	3,00	3,60
l_t	Length of the screw tip	-	-	-	-	-	7,30
	Drive TX	10	10 / 20	20	20	20 / 25	30
	Drive PZ	1	2	2	2	2	3

Nominal length		Standard thread length | l_{gf} = Full thread | l_{gp} =Partial thread | Tolerance: ± 2,0[3)]											
l_s		Allowed Deviations											
	$l_{s,min/max}$	l_{gf}	l_{gp}	l_{gf}	l_{gp}	l_{gf}	l_{gp}	l_{gf}	l_{gp}	l_{gf}	l_{gp}	l_{gf}	l_{gp}
20	l_s ± 1,05	16		16									
25	l_s ±1,25	21	18	21	18	20	18	20					
30	l_s ±1,25	26	18	26	18	25	18	25	18	24			
35	l_s ±1,50	31	24	31	24	30	24	30	24	29	24	28	
40	l_s ±1,50	36	28	36	28	35	28	35	28	34	28	33	28
45	l_s ±1,50	41	30	41	30	40	30	40	30	39	30	38	30
50	l_s ±1,50			46	30	45	30	45	30	44	30	43	30
55	l_s ±1,75					50	36	50	36	49	36	48	36
in steps of 10 mm													
60	l_s ±1,75					55	36	55	36	54	36	53	36
70	l_s ±1,75						42	60	42	64	42	63	42
80	l_s ±1,75						45	75	45	74	45	73	45
90	l_s ±2,00										54		54
100	l_s ±2,00										60		60
110	l_s ±2,00										70		70
120	l_s ±2,00										70		70
130-300	l_s ± 3,00												70

All sizes in [mm]

- Screws with partial thread > 60 mm, l_s with shank ribs

2) Other screw lengths with l_s min ≤ l_s ≤ l_s max and other thread lengths l_{gf} resp. l_{gp} ≥ 4·d up to max, standard thread lengths are allowed

3) For 10 mm ≤ l_{gf} resp.,l_{gp} ≤ 18 mm → tolerance ±1,5 mm and for 18 mm < l_{gf} resp. l_{gp} ≤ 30 mm → tolerance ±1,7 mm

PowerFast II – Chipboard screw – Pan head with full- or partial thread

Table A3.1: Screw Dimensions and Materials

Drawing

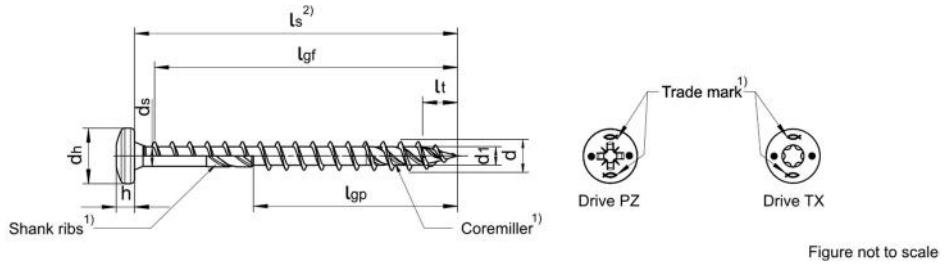

Materials and coatings

- Carbon Steel
- yellow zinc-plated, blue zinc-plated, blue zinc-plated ≥12 µm, bonus-zinc-coated, burnished, nickel plated, brass plated

Nominal diameter		**3,0**	**3,5**		**4,0**	**4,5**	**5,0**		**6,0**
d	Outer thread diameter	3,00	3,50		4,00	4,50	5,10		6,00
	Allowed deviation	± 0,25	± 0,25		± 0,30	± 0,30	± 0,30		± 0,30
d_1	Inner thread diameter	1,95	2,20		2,50	2,75	3,25		4,00
	Allowed deviation	± 0,18	± 0,18		± 0,20	± 0,20	± 0,20		± 0,30
d_h	Head diameter	6,00	7,00		8,00	9,00	10,00		12,00
	Allowed deviation	± 0,50	± 0,50		± 0,60	± 0,60	± 0,60		± 0,60
d_s	Shank diameter	2,25	2,60		2,90	3,20	3,70		4,30
	Allowed deviation	± 0,15	± 0,15		± 0,15	± 0,15	± 0,15		± 0,15
h	Head height	2,30	2,50		2,80	2,80	3,40		3,40
l_t	Length of the screw tip	-	-		-	-	-		7,30
	Drive TX	10	10	20	20	20	20	25	30
	Drive PZ	1	2		2	2	2		3

Nominal length		**Standard thread length | l_{gf} = Full thread | l_{gp} =Partial thread | Tolerance: ± 2,0[3)]**											
l_s		Allowed Deviations											
	$l_{s,min/max}$	l_{gf}	l_{gp}	l_{gf}	l_{gp}	l_{gf}	l_{gp}	l_{gf}	l_{gp}	l_{gf}	l_{gp}	l_{gf}	l_{gp}
20	l_s ± 1,05	16		16									
25	l_s ±1,25	21	18	21	18	21	18	21					
30	l_s ±1,25	26	18	26	18	26	18	26	18	26			
35	l_s ±1,50	31	24	31	24	31	24	31	24	31	24	30	
40	l_s ±1,50	36	28	36	28	36	28	36	28	36	28	35	28
45	l_s ±1,50	41	30	41	30	41	30	41	30	41	30	40	30
50	l_s ±1,50			46	30	46	30	46	30	46	30	45	30
55	l_s ±1,75					51	36	51	36	51	36	50	36
in steps of 10 mm													
60	l_s ±1,75					56	36	56	36	56	36	55	36
70	l_s ±1,75						42	66	42	66	42	65	42
80	l_s ±1,75						45	76	45	76	45	75	45
90	l_s ±2,00										54		54
100	l_s ±2,00										60		60
110	l_s ±2,00										70		70
120	l_s ±2,00										70		70
130-300	l_s ± 3,00												70

All sizes in [mm]

- Screws with partial thread > 60 mm, l_s with shank ribs

2) Other screw lengths with l_s min ≤ l_s ≤ l_s max and other thread lengths l_{gf} resp. l_{gp} ≥ 4·d up to max, standard thread lengths are allowed

3) For 10 mm ≤ l_{gf} resp.,l_{gp} ≤ 18 mm → tolerance ±1,5 mm and for 18 mm < l_{gf} resp. l_{gp} ≤ 30 mm → tolerance ±1,7 mm

PowerFast II – Chipboard screw with clamping effect

Table A4.1: Screw Dimensions and Materials

Drawing

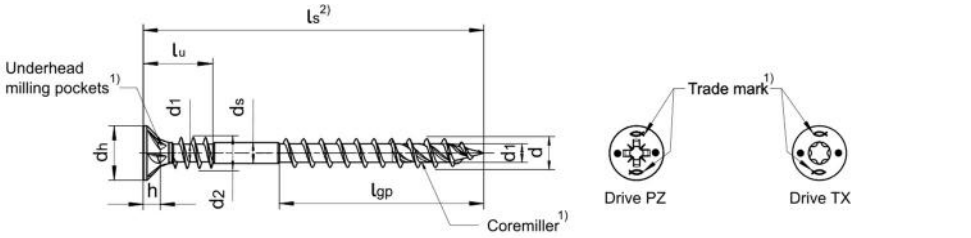

1)optional

Figure not to scale

Materials and coatings

- Carbon Steel
- yellow zinc-plated, blue zinc-plated, blue zinc-plated ≥12 µm, bonus-zinc-coated, burnished, nickel plated, brass plated

Nominal diameter		**3,5**		**4,0**	**4,5**
d	Outer thread diameter	3,50		4,00	4,50
	Allowed deviation	± 0,25		± 0,30	± 0,30
***d*₁**	Inner thread diameter	2,20		2,50	2,75
	Allowed deviation	± 0,18		± 0,20	± 0,20
***d*₂**	Outer thread diameter	4,00		4,50	5,00
	Allowed deviation	± 0,30		± 0,30	± 0,30
***d*ₕ**	Head diameter	7,00		8,00	8,80
	Allowed deviation	± 0,50		± 0,60	± 0,60
***d*ₛ**	Shank diameter	2,60		2,90	3,20
	Allowed deviation	± 0,15		± 0,15	± 0,15
h	Head height	2,30		2,40	2,70
***l*ₜ**	Length of the screw tip	-		-	-
	Drive TX	10	20	20	20
	Drive PZ	2		2	2

Nominal length		**Standard thread length | l_u = Underhead thread | l_{gp} =Partial thread | Tol.: ± 2,0[3)]**					
l_s		Allowed Deviations					
	$l_{s,min/max}$	l_u	l_{gp}	l_u	l_{gp}	l_u	l_{gp}
30	l_s ±1,25	10	16	10,5	16		
35	l_s ±1,50	10	16	10,5	16		
40	l_s ±1,50	10	24	10,5	24		
45	l_s ±1,50	10	24	10,5	24		
50	l_s ±1,50	10	24	10,5	24	12	24
55	l_s ±1,75	10	30	10,5	30	12	30
in steps of 10 mm							
60	l_s ±1,75	10	30	10,5	30	12	30
70	l_s ±1,75			10,5	30	12	30
80	l_s ±1,75						
130-300	l_s ± 3,00						

All sizes in [mm]

- Screws with partial thread > 60 mm, l_s with shank ribs

2) Other screw lengths with l_s min ≤ l_s ≤ l_s max and other thread lengths l_{gf} resp. l_{gp} ≥ 4·d up to max, standard thread lengths are allowed

3) For 10 mm ≤ l_{gf} resp.,l_{gp} ≤ 18 mm → tolerance ±1,5 mm and for 18 mm < l_{gf} resp. l_{gp} ≤ 30 mm → tolerance ±1,7 mm

PowerFast II – Chipboard screw - Flange head with full- or partial thread

Table A5.1: Screw Dimensions and Materials

Drawing

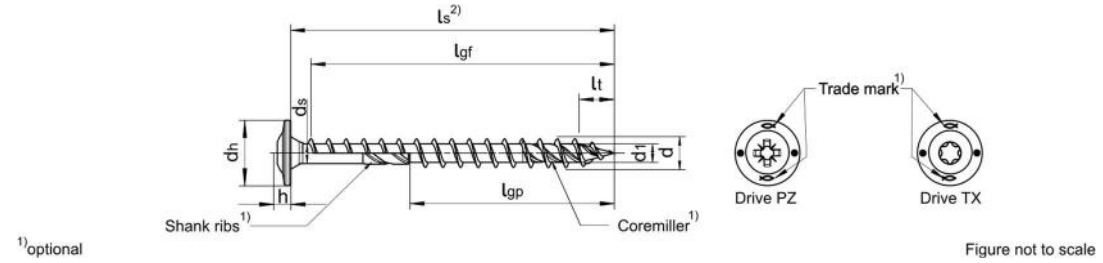

Materials and coatings

- Carbon Steel
- yellow zinc-plated, blue zinc-plated, blue zinc-plated ≥12 µm, bonus-zinc-coated, burnished, nickel plated, brass plated

Nominal diameter		5,0		6,0
d	Outer thread diameter	5,10		6,00
	Allowed deviation	± 0,30		± 0,30
d_1	Inner thread diameter	3,25		4,00
	Allowed deviation	± 0,20		± 0,30
d_h	Head diameter	11,00		13,50
	Allowed deviation	± 1,00		± 1,00
d_s	Shank diameter	3,70		4,30
	Allowed deviation	± 0,15		± 0,15
h	Head height	3,00		3,10
l_t	Length of the screw tip	-		7,30
	Drive TX	20	25	30
	Drive PZ	2		3

Nominal length		Standard thread length | l_{gf} = Full thread | l_{gp} =Partial thread | Tolerance: ± 2,0[3)]				
l_s		Allowed Deviations				
	$l_{s,min/max}$	l_{gf}	l_{gp}	l_{gf}	l_{gp}	
30	l_s ±1,25	26				
35	l_s ±1,50	31	24	30		
40	l_s ±1,50	36	28	35	28	
45	l_s ±1,50	41	30	40	30	
50	l_s ±1,50	46	30	45	30	
55	l_s ±1,75	51	36	50	36	
in steps of 10 mm						
60	l_s ±1,75	56	36	55	36	
70	l_s ±1,75	66	42	65	42	
80	l_s ±1,75	76	45	75	45	
90	l_s ±2,00		54		54	
100	l_s ±2,00		60		60	
110	l_s ±2,00		70		70	
120	l_s ±2,00		70		70	
130-300	l_s ±3,00				70	

All sizes in [mm]

- Screws with partial thread > 60 mm, l_s with shank ribs

2) Other screw lengths with l_s min ≤ l_s ≤ l_s max and other thread lengths l_{gf} resp. l_{gp} ≥ 4·d up to max, standard thread lengths are allowed

3) For 10 mm ≤ l_{gf} resp.,l_{gp} ≤ 18 mm → tolerance ±1,5 mm and for 18 mm < l_{gf} resp. l_{gp} ≤ 30 mm → tolerance ±1,7 mm

PowerFast II – Chipboard screw – Step countersunk head with full- or partial thread

Table A6.1: Screw Dimensions and Materials

Drawing

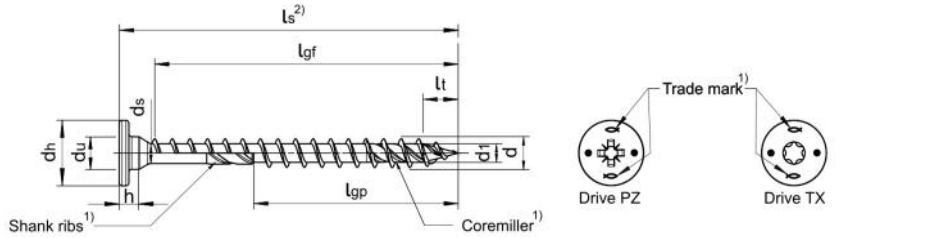

1)optional

Figure not to scale

Materials and coatings

- Carbon Steel
- yellow zinc-plated, blue zinc-plated, blue zinc-plated ≥12 µm, bonus-zinc-coated, burnished, nickel plated, brass plated

Nominal diameter		**5,0**		**6,0**
d	Outer thread diameter	5,10		6,00
	Allowed deviation	± 0,30		± 0,30
d_1	Inner thread diameter	3,25		4,00
	Allowed deviation	± 0,20		± 0,30
d_h	Head diameter	11,00		13,50
	Allowed deviation	± 1,00		± 1,00
d_u	Underhead diameter	6,40		7,50
d_s	Shank diameter	3,70		4,30
	Allowed deviation	± 0,15		± 0,15
h	Head height	3,30		4,20
l_t	Length of the screw tip	-		7,30
	Drive TX	20	25	30
	Drive PZ	2		3

Nominal length		**Standard thread length | l_{gf} = Full thread | l_{gp} =Partial thread | Tolerance: ± 2,0**[3]			
l_s	Allowed Deviations				
	$l_{s,min/max}$	l_{gf}	l_{gp}	l_{gf}	l_{gp}
30	l_s ±1,25	22			
35	l_s ±1,50	27	24	25	
40	l_s ±1,50	32	28	30	28
45	l_s ±1,50	37	30	35	30
50	l_s ±1,50	42	30	40	30
55	l_s ±1,75	47	36	45	36
in steps of 10 mm					
60	l_s ±1,75	52	36	50	36
70	l_s ±1,75	62	42	60	42
80	l_s ±1,75	72	45	70	45
90	l_s ±2,00		54		54
100	l_s ±2,00		60		60
110	l_s ±2,00		70		70
120	l_s ±2,00		70		70
130-300	l_s ± 3,00				70

All sizes in [mm]

- Screws with partial thread > 60 mm, l_s with shank ribs

2) Other screw lengths with l_s min ≤ l_s ≤ l_s max and other thread lengths l_{gf} resp. l_{gp} ≥ 4·d up to max, standard thread lengths are allowed

3) For 10 mm ≤ l_{gf} resp.,l_{gp} ≤ 18 mm → tolerance ±1,5 mm and for 18 mm < l_{gf} resp. l_{gp} ≤ 30 mm → tolerance ±1,7 mm

PowerFast II - Wood Construction screw – Countersunk head with full- or partial thread

Table A7.1: Screw Dimensions and Materials

Drawing

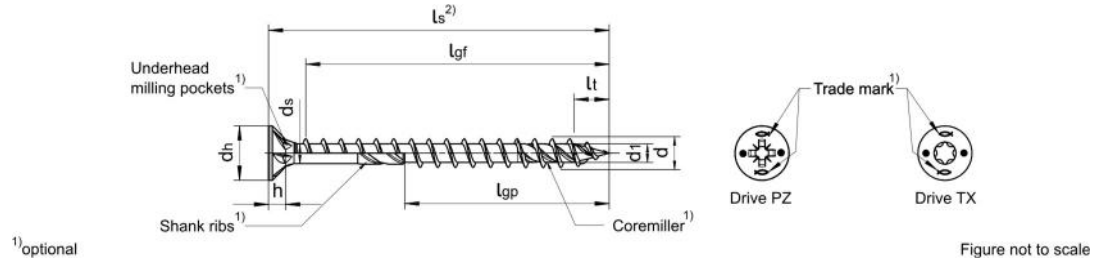

Materials and coatings

- Carbon Steel
- yellow zinc-plated, blue zinc-plated, blue zinc-plated ≥12 µm, bonus-zinc-coated

Nominal diameter		**8,0**	**10,0**	**12,0**
d	Outer thread diameter	8,0	10,0	12,0
	Allowed deviation	± 0,40	± 0,50	± 0,60
d_1	Inner thread diameter	5,40	6,40	7,40
	Allowed deviation	± 0,30	± 0,30	± 0,35
d_h	Head diameter	14,40	18,40	22,40
	Allowed deviation	± 0,70	± 0,90	± 1,10
d_s	Shank diameter	5,90	6,90	8,20
	Allowed deviation	± 0,30	± 0,35	± 0,35
h	Head height	4,60	5,40	6,70
l_t	Length of the screw tip	11,00	12,00	13,00
	Drive TX	40	40	50

Nominal length		**Standard thread length | l_{gf} = Full thread | l_{gp} =Partial thread | Tolerance: ± 2,0**					
l_s		Allowed Deviations					
	$l_{s,min/max}$	l_{gf}	l_{gp}	l_{gf}	l_{gp}	l_{gf}	l_{gp}
80	l_s ±2,30	68	60		60		
90	l_s ±2,70	78	60		60		
in steps of 20 mm							
100	l_s ±2,70	88	60		60		60
120	l_s ±2,70	108	80		80		80
140	l_s ±3,20		80		80		80
160	l_s ±3,20		80		80		80
180	l_s ±3,20		100		100		100
200	l_s ±3,60		100		100		100
220	l_s ±3,60		100		100		100
240	l_s ±3,60		100		100		120
260	l_s ±4,10		100		100		120
280	l_s ±4,10		100		115		120
300	l_s ±4,10		100		115		120
320-400	l_s ±4,50		100		115		120
420-500	l_s ± 4,90		100		115		120
520-600	l_s ± 5,50		100		115		120

All sizes in [mm]

- Screws with partial thread > 60 mm, l_s with shank ribs

2) Other screw lengths with l_s min ≤ l_s ≤ l_s max and other thread lengths l_{gf} resp. l_{gp} ≥ 4·d up to max, standard thread lengths are allowed

PowerFast II - Wood Construction screw – Flange head with full- or partial thread

Table A8.1: Screw Dimensions and Materials

Drawing

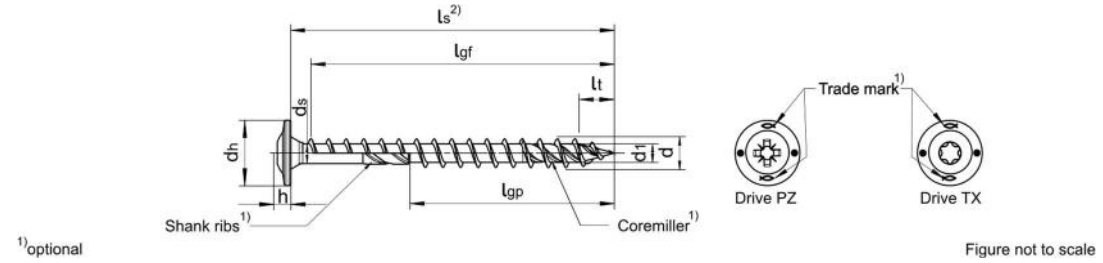

Materials and coatings

- Carbon Steel
- yellow zinc-plated, blue zinc-plated, blue zinc-plated ≥12 µm, bonus-zinc-coated

Nominal diameter		8,0	10,0	12,0
d	Outer thread diameter	8,0	10,0	12,0
	Allowed deviation	± 0,40	± 0,50	± 0,60
d_1	Inner thread diameter	5,40	6,40	7,40
	Allowed deviation	± 0,30	± 0,30	± 0,35
d_h	Head diameter	21,00	25,50	30,50
	Allowed deviation	±1,00	±1,50	±2,50
d_s	Shank diameter	5,90	6,90	8,20
	Allowed deviation	± 0,30	± 0,35	± 0,35
h	Head height	3,50	4,70	5,70
l_t	Length of the screw tip	11,00	12,00	13,00
	Drive TX	40	40	50

Nominal length		Standard thread length | l_{gf} = Full thread | l_{gp} =Partial thread | Tolerance: ± 2,0					
l_s		Allowed Deviations					
	$l_{s,min/max}$	l_{gf}	l_{gp}	l_{gf}	l_{gp}	l_{gf}	l_{gp}
80	l_s ±2,30	75	60		60		
90	l_s ±2,70	82	60		60		
in steps of 20 mm							
100	l_s ±2,70	92	60		60		60
120	l_s ±2,70	112	80		80		80
140	l_s ±3,20		80		80		80
160	l_s ±3,20		80		80		80
180	l_s ±3,20		100		100		100
200	l_s ±3,60		100		100		100
220	l_s ±3,60		100		100		100
240	l_s ±3,60		100		100		120
260	l_s ±4,10		100		100		120
280	l_s ±4,10		100		115		120
300	l_s ±4,10		100		115		120
320-400	l_s ±4,50		100		115		120
420-500	l_s ± 4,90		100		115		120
520-600	l_s ± 5,50		100		115		120

All sizes in [mm]

- Screws with partial thread > 60 mm, l_s with shank ribs

2) Other screw lengths with l_s min ≤ l_s ≤ l_s max and other thread lengths l_{gf} resp. l_{gp} ≥ 4·d up to max, standard thread lengths are allowed

PowerFast II - Wood Construction screw – Step Countersunk head with full- or partial thread

Table A9.1: Screw Dimensions and Materials

Drawing

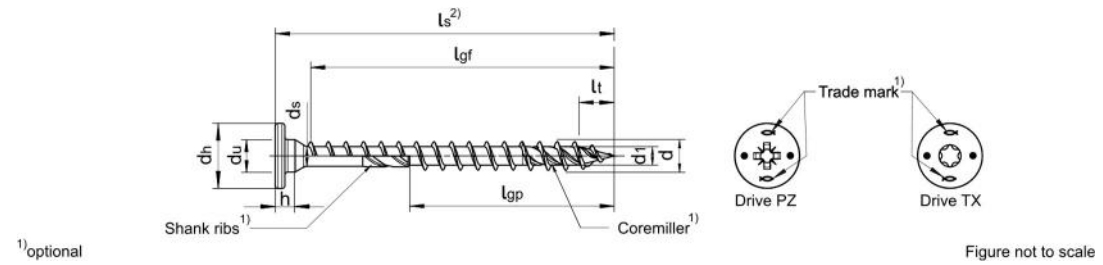

Materials and coatings

- Carbon Steel
- yellow zinc-plated, blue zinc-plated, blue zinc-plated ≥12 µm, bonus-zinc-coated

Nominal diameter		**8,0**	**10,0**
d	Outer thread diameter	8,0	10,0
	Allowed deviation	± 0,40	± 0,50
***d*₁**	Inner thread diameter	5,40	6,40
	Allowed deviation	± 0,30	± 0,30
***d*ₕ**	Head diameter	21,00	25,50
	Allowed deviation	±1,00	±1,50
dᵤ	Underhead diameter	9,00	11,00
dₛ	Shank diameter	5,90	6,90
	Allowed deviation	± 0,30	± 0,35
h	Head height	5,50	6,70
***l*ₜ**	Length of the screw tip	11,00	12,00
	Drive TX	40	40

Nominal length		**Standard thread length | l_{gf} = Full thread | l_{gp} =Partial thread | Tolerance: ± 2,0**				
l_s	Allowed Deviations					
	$l_{s,min/max}$	l_{gf}	l_{gp}	l_{gf}	l_{gp}	
80	l_s ±2,30	68	60		60	
90	l_s ±2,70	78	60		60	
in steps of 20 mm						
100	l_s ±2,70	88	60		60	
120	l_s ±2,70	108	80		80	
140	l_s ±3,20		80		80	
160	l_s ±3,20		80		80	
180	l_s ±3,20		100		100	
200	l_s ±3,60		100		100	
220	l_s ±3,60		100		100	
240	l_s ±3,60		100		100	
260	l_s ±4,10		100		100	
280	l_s ±4,10		100		115	
300	l_s ±4,10		100		115	
320-400	l_s ±4,50		100		115	
420-500	l_s ± 4,90		100		115	
520-600	l_s ± 5,50		100		115	

All sizes in [mm]

- Screws with partial thread > 60 mm l_s with shank ribs

2) Other screw lengths with l_s min ≤ l_s ≤ l_s max and other thread lengths l_{gf} resp. l_{gp} ≥ 4·d up to max, standard thread lengths are allowed

PowerFast II - Wood Construction screw – Hexagon head with full- or partial thread

Table A10.1: Screw Dimensions and Materials

Drawing

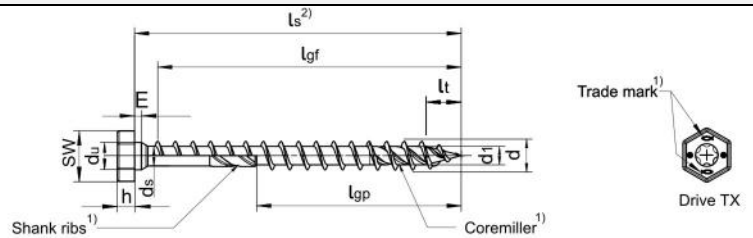

1)optional

Figure not to scale

Materials and coatings

- Carbon Steel
- yellow zinc-plated, blue zinc-plated, blue zinc-plated ≥12 µm, bonus-zinc-coated

Nominal diameter		8,0	10,0	12,0
d	Outer thread diameter	8,0	10,0	12,0
	Allowed deviation	± 0,40	± 0,50	± 0,60
d_1	Inner thread diameter	5,40	6,40	7,40
	Allowed deviation	± 0,30	± 0,30	± 0,35
d_u	Underhead diameter	8,00	10,00	12,00
SW	Wrench size	12,90	14,90	16,90
	Allowed deviation	± 0,50	± 0,50	± 0,50
E	Height	2,10	2,30	3,30
	Allowed deviation	± 0,60	± 0,60	± 0,60
d_s	Shank diameter	5,90	6,90	8,20
	Allowed deviation	± 0,30	± 0,35	± 0,35
h	Head height	5,50	6,00	6,80
l_t	Length of the screw tip	11,00	12,00	13,00
	Drive TX	40	40	50

Nominal length		Standard thread length | l_{gf} = Full thread | l_{gp} =Partial thread | Tolerance: ± 2,0					
l_s		Allowed Deviations					
	$l_{s,min/max}$	l_{gf}	l_{gp}	l_{gf}	l_{gp}	l_{gf}	l_{gp}
80	l_s ±2,30	75	75		75		
90	l_s ±2,70	82	75		75		
in steps of 20 mm							
100	l_s ±2,70	92	75		75		80
120	l_s ±2,70	112	100		115		100
140	l_s ±3,20		100		115		120
160	l_s ±3,20		100		115		120
180	l_s ±3,20		100		115		145
200-240	l_s ±3,60		100		115		145
260-300	l_s ±4,10		100		115		145
320-400	l_s ±4,50		100		115		145
420-500	l_s ±4,90		100		115		145
520-600	l_s ± 5,50		100		115		145

All sizes in [mm]

- Screws with partial thread > 60 mm l_s with shank ribs

2) Other screw lengths with l_s min ≤ l_s ≤ l_s max and other thread lengths l_{gf} resp. l_{gp} ≥ 4·d up to max, standard thread lengths are allowed

PowerFast II - Wood Construction screw – Hexagon head with washer and full- or partial thread

Table A11.1: Screw Dimensions and Materials

Drawing

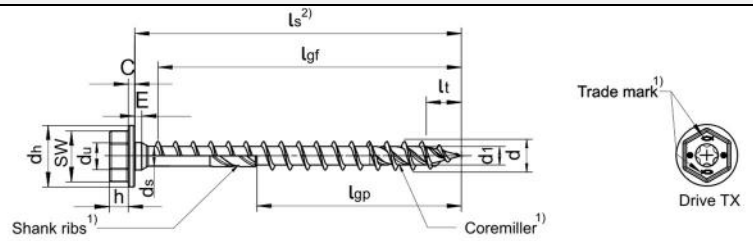

1)optional

Figure not to scale

Materials and coatings

- Carbon Steel
- yellow zinc-plated, blue zinc-plated, blue zinc-plated ≥12 µm, bonus-zinc-coated

Nominal diameter		**8,0**	**10,0**	**12,0**
d	Outer thread diameter	8,0	10,0	12,0
	Allowed deviation	± 0,40	± 0,50	± 0,60
d_1	Inner thread diameter	5,40	6,40	7,40
	Allowed deviation	± 0,30	± 0,30	± 0,35
d_h	Head diameter	18,00	21,30	23,40
	Allowed deviation	± 1,00	± 1,10	±1,20
d_u	Underhead diameter	8,00	10,00	12,00
SW	Wrench size	12,90	14,90	16,90
	Allowed deviation	± 0,50	± 0,50	± 0,50
C	Washer height	2,00	2,20	2,50
E	Height	2,10	2,30	3,30
	Allowed deviation	± 0,60	± 0,60	± 0,60
d_s	Shank diameter	5,90	6,90	8,20
	Allowed deviation	± 0,30	± 0,35	± 0,35
h	Head height	5,50	6,00	6,80
l_t	Length of the screw tip	11,00	12,00	13,00
	Drive TX	40	40	50

Nominal length		**Standard thread length | l_{gf} =Full thread | l_{gp}=Partial thread | Tolerance: ± 2,0**					
l_s	Allowed Deviations						
	$l_{s,min/max}$	l_{gf}	l_{gp}	l_{gf}	l_{gp}	l_{gf}	l_{gp}
80	l_s ±2,30	75	75		75		
90	l_s ±2,70	82	75		75		
in steps of 20 mm							
100	l_s ±2,70	92	75		75		80
120	l_s ±2,70	112	100		115		100
140	l_s ±3,20		100		115		120
160	l_s ±3,20		100		115		120
180	l_s ±3,20		100		115		145
200-240	l_s ±3,60		100		115		145
260-300	l_s ±4,10		100		115		145
320-400	l_s ±4,50		100		115		145
420-500	l_s ±4,90		100		115		145
520-600	l_s ± 5,50		100		115		145

All sizes in [mm]

- Screws with partial thread > 60 mm l_s with shank ribs

2) Other screw lengths with l_s min ≤ l_s ≤ l_s max and other thread lengths l_{gf} resp. l_{gp} ≥ 4·d up to max. standard thread lengths are allowed

FAFS-Clip of adjustable frame screw

Table A12.1: FAFS-Clip Dimensions and Materials

Drawing

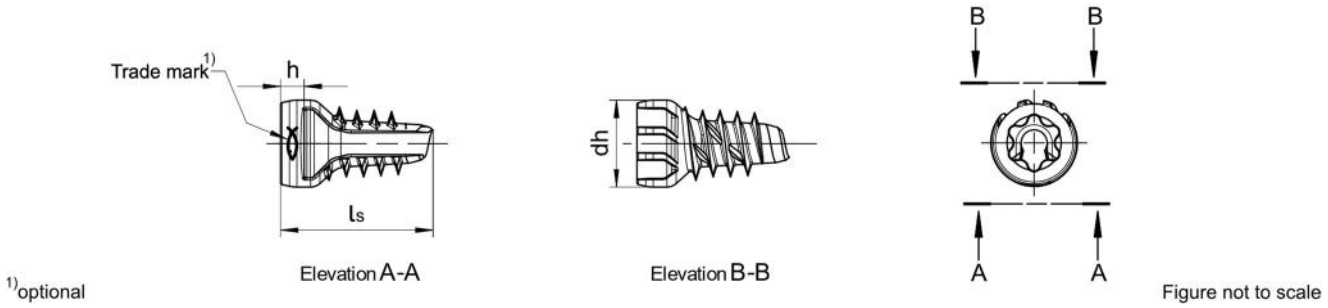

Materials and coatings

- Zinc die cast

Nominal diameter		5,0
l_s	Nominal length	22,0
	Allow. deviation	± 1,50
d_h	Head diameter	12,5
	Allow. deviation	± 0,62
h	Head height	4,30
	Allow. deviation	± 0,20
	Drive TX	non-standard

All sizes in [mm]

PowerFast II - Washers

Table A13.1: Washer Dimensions and Materials

Drawing

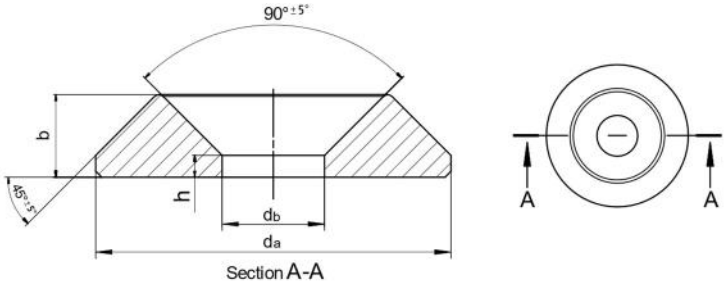

[1]optional

Section A-A

Figure not to scale

Materials and coatings

- Carbon Steel
- Yellow zinc-plated, blue zinc-plated, blue zinc-plated ≥12µm, bonus-zinc-coated, burnished, nickel plated, brass plated
- Stainless steel

Nominal diameter		6,0	8,0	10,0	12,0
d_a	Outer diameter	21,00	25,50	30,50	37,40
	Allowed deviation	± 2,0	± 2,0	± 2,0	± 0,4
d_b	Inner diameter	6,70	8,70	11,20	14,00
	Allowed deviation	-0,4	-0,4	-0,4	± 0,4
b	Washer height	4,70	5,20	6,20	8,50
	Allowed deviation	-0,4	-0,4	-0,4	± 0,3
h	Washer edge height	1,50	1,80	2,00	2,50
	Allowed deviation	± 0,15	± 0,15	± 0,15	± 0,30

All sizes in [mm]

Specifications of the intended use

Base Materials:
The screws are used for connections in load bearing timber structures between members of softwood and hardwood shown in the Table B1.1 and in combination with steel plates.
»fischer PowerFast II« screws can also be used for fixing of thermal insulation on rafters and on vertical facades and ceilings (Annex E, F and Annex G).

“fischer PowerFast II” screws with a thread over the full length can also be used as tensile or compressive reinforcement perpendicular to the grain or as shear reinforcement. Furthermore “fischer PowerFast II” screws with a diameter ≥ 6 mm may also be used for fixing of thermal insulation on rafters and on vertical facades, see also Annex E and Annex G. Steel plates and wood-based panels which are not covered with explicit characteristic values (e.g. Table D12.2) in that ETA, shall only be fixed on the side of the screw head.
The minimum thickness of wood-bases panels should be at least 1,2·*d* - except of approved wood-based panels acc. to Annex D5 and D6.

Table B1.1: Materials for the intended use

Groups and Subgroups		Product	Abbreviation	hEN, or ETA
Solid wood based (SWB)	Structural timber (ST)	Strength graded structural softwood timber	ST-c	EN 14081-1, EN 1912
		Strength graded structural hardwood timber	ST-d	EN 14081-1, EN 1912
		Structural finger jointed timber	FST	EN 15497
		Glued structural timber	GST	EN 14080
	Parallel laminated timber (PL)	Glued laminated timber made of softwoods	GLT-c	EN 14080
		Block glued glulam	BGLT	EN 14080
		Glued laminated timber made of hardwoods	GLT-d	various ETAs
		Single layered solid wood panel	SWP-P	EN 13353
	Cross laminated timber (CL)	Cross laminated timber	CLT	various ETAs, EN 16351
		Multi-layered solid wood panel	SWP-C	EN 13353

Table B2.1: Materials for the intended use (continuous of Table B1.1)

Groups and Subgroups			Product	Abbreviation	hEN or ETA
Veneer-based (VB)	Laminated Veneer Lumber (LVL)	LVL-P	Softwood LVL with parallel veneers	LVL-P-c	EN 14374
			Hardwood LVL with parallel veneers	LVL-P-d	various ETAs
			Hardwood Glued LVL with parallel veneers	GLVL-P-c	various ETAs
			Hardwood Glued LVL with parallel veneers	GLVL-P-d	various ETAs
		LVL-C	Softwood LVL with crossband veneers	LVL-C-c	EN 14374
			Hardwood LVL with crossband veneers	LVL-C-d	various ETAs
			Softwood Glued LVL with crossband veneers	GLVL-C-c	various ETAs
			Softwood Glued LVL with crossband veneers	GLVL-C-d	various ETAs
	PLY		Softwood Plywood	PLY-c	EN 13986 and EN 636
			Hardwood Plywood	PLY-d	EN 13986 and EN 636
Strand based (SB)			Oriented strand board	OSB	EN 13986 and EN 300
Wood -fibre- based (WFB)			Fibreboard, hard	HB	EN 622-2
			Fibreboard, medium	MB	EN 622-3
Wood- particle- based (WPB)			Resinoid-bonded particle board	RPB	EN 13986 and EN 312
Gypsum -based (GYB)			Gypsum plasterboards	GPB	EN 520
			Gypsum fibreboards	GFB	EN 15283-2

Specifications of the intended use

Design:
The design of the connections shall be based on the characteristic load-carrying capacities of the screws given in Annex C and Annex D.
The design capacities shall be derived from the characteristic capacities in accordance with the EN 1995-1-1 or an appropriate National Code. The screws are intended for the use of connections subjected to static or quasi-static loadings.
The zinc-coated screws are for the use in timber structures subjected to moisture defined by the service classes 1 and 2 according to EN 1995-1-1.

- Instructions from *fischerwerke GmbH & Co. KG* should be considered for installation.
- A minimum of two screws should be used for connections in load bearing timber structures.
- The overall length l_s of the screws, shall not be less than 20 mm and shall not be greater than 600 mm. Dimensions see Annex A.
- The ratio of inner thread diameter to outer thread diameter d_1/d ranges from 0,50 to 0,80.
- The thread pitch p (distance between two adjacent thread flanks) ranges from $0{,}50 \cdot d$ to $0{,}85 \cdot d$.
- Earthquake design: No breaking is observed at a bending angle of $\alpha \leq (45/d^{0,7} + 20)°$.

Installation: The screws shall be driven into softwood and hardwood with a maximum characteristic density of 730 kg/m³ without pre-drilling or after pre-drilling (see Table B3.1 and Table B4.1) with a diameter not larger than the inner threaded diameter d_1 (Annex A).

Table B3.1: Recommended pre-drilling diameter for soft- and hardwood

Outer thread diameter d [mm]	Bore-hole diameter [mm] Softwood and Hardwood
3,0	2,0
3,5	2,0
4,0	2,5
4,5	2,5
5,0	3,0
6,0	4,0
8,0	5,0
10,0	6,0
12,0	7,0

Specifications of the intended use

Installation:
Recommended values without pre-drilling for the maximum penetration length of the threaded part of »fischer PowerFast II« made of carbon steel in wood-based members like ash, beech and oak or LVL according to ETA-14/0354 (e.g. Baubuche) are shown in Table B4.1 below. There is no limitation in softwood or wood-based members made of softwood.

Table B4.1: Recommended penetration length without pre-drilling in hardwood

Outer thread diameter *d* [mm]	Maximum penetration length [mm]
3,0	40
3,5	45
4,0	50
4,5	60
5,0	70
6,0	70
8,0	70
10,0	Pre-drilled application is recommended
12,0	

When using screws with a countersunk or step countersunk the upper surface of the screw head must be flush with the surface of the timber part. Especially for timber parts with gross densities higher than 550 kg/m³ it is recommended to use adequate counter-sinker to avoid breaking of the screw heads. For non-predrilled applications countersinking deeper is not permitted and should be avoided, because of damaging the surface and reduce the durability of the construction. Countersunk head screws made of carbon steel according to Annex A1, A2, A4 and A7 can be used together with washers according to Annex A13. Washers according to EN ISO 7094 can be used together with washers according to Annex A13.

»fischer PowerFast II – Chipboard screws« with a diameter between 4,5 mm and 6,0 mm and all diameters of »fischer PowerFast II – Wood Construction screws« can be driven in with standard screw drillers and with torque impact screw drivers too (e.g. fischer FSS 18V 400 BL or fischer FSS 18V 600). In combination with steel plates, torque controlled tools e.g. torque wrenches have to be used. For the use of screws in wood-based panels, like particle- and fibreboards, the screws have to be tightened carefully to ensure the characteristic load bearing capacity.

If on the head side metal plates are mounted, it has to be ensured that the diameter of the borehole of the steel plate has to be ≤ d + 1 [mm]. Effects of the borehole tolerances must be considered in the structural design (load-independent slippage).

In addition, care must be taken about the accuracy of fit between the screw head and the metal to avoid stress peaks, and thus also requires a maximum allowed deviation of the screw-in-direction of ± 5° (e. g. screw-in direction ε = 90° to the surface means 85° ≤ ε ≤ 95°). For the definition of the angle ε referred to the screw axis and the structural element see Figure D2.1.

Specifications of the intended use

Minimum timber cross section, end- and edge distances - Notations

For structural timber members, minimum spacings and distances for screws $d \leq 8$ mm in predrilled holes are given as for nails in predrilled holes in EN 1995-1-1 clause 8.3.1.2 and table 8.2 and for screws $d > 8$ mm in clause 8.5. Here, the outer thread diameter d must be considered. The requirements of the minimum thickness of the timber elements must be considered, see EN 1995-1-1 clause 8.3.1.2.

Spacing a_2 may be reduced from $5 \cdot d$ to $2{,}5 \cdot d$, if the condition $a_1 \cdot a_2 \geq 25 \cdot d^2$ is fulfilled. For Douglas-fir members minimum spacings and distances parallel to the grain shall be increased by at least 50 %.

Minimum distances from the unloaded edge perpendicular to the grain may be reduced to $3 \cdot d$ also for timber thickness $t < 5 \cdot d$, if the spacing parallel to the grain and the end distance is at least $25 \cdot d$.

Table B5.1: Shapes of screw heads and applications with steel plates

Head shapes	Description
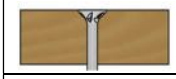	Screws with countersunk, raised countersunk according to Annex A1, A2, A4, A7
	Screws with step countersunk according to Annex A6 and A9
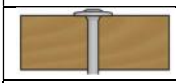	Screws with pan head and flange head and hexagon head according to Annex A3, A5, A8, A10 and A11
	Screws to fix steel plates on the head side according to Annex A1, A2, A3, A5, A6, A7, A8, A9, A10, A11

Figures not to scale

Table B5.2: Minimum distances and spacings
Notations for Structural Timber (ST-c) and Glued Laminated Timber (GLT-c) made in softwoods

Notations		
a_1	Spacing a_1 parallel to the grain of Solid Timber	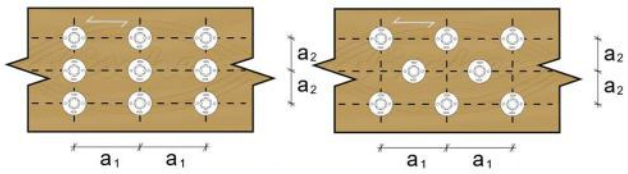
a_2	Spacing a_2 perpendicular to the grain of Solid Timber	
$a_{3,c}$	Distance $a_{3,c}$ from the centre of the screw-part in timber to the unloaded end grain of Solid Timber, $90° \leq \alpha \leq 270°$	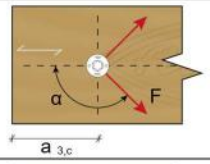
$a_{3,t}$	Distance $a_{3,t}$ from the centre of the screw-part in timber to the loaded edge of Solid Timber $-90° \leq \alpha \leq 90°$	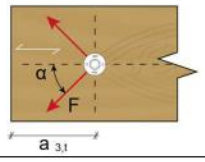
$a_{4,c}$	Distance $a_{4,c}$ from the centre of the screw-part in timber to the unloaded edge of Solid Timber $180° \leq \alpha \leq 360°$	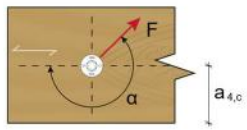
$a_{4,t}$	Distance $a_{4,t}$ from the centre of the screw-part in timber to the loaded end grain of Solid Timber $0° < \alpha < 180°$	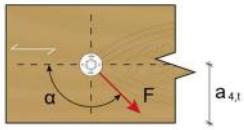

Figures not to scale

Specifications of the intended use

Minimum timber cross section, end- and edge distances
Materials: Solid Timber (ST-c, FST-c, and GST-c) and Glued Laminated Timber (GLT-c, BGLT-c)

Laterally loaded Screws
Minimum distances and spacings for laterally loaded »fischer PowerFast II« screws in non-predrilled holes in members of Solid Timber (ST-c, FST-c, GST-c), Glued Laminated Timber (GLT-c, BGLT-c) or similar glued products with a minimum thickness $t = 12 \cdot d$ and a minimum width of $8 \cdot d$ or 60 mm, whichever is greater up to a gross density of 480 kg/m³, are recommended to choose with the help of Table B6.1. For all other applications (predrilled applications, dimensions of the timber elements and gross densities higher than 480 kg/m³) the regulations of chapter 8.3.1 for screws with $d \leq 8$ mm and chapter 8.5.1 for screws with 8 mm < $d \leq 12$ mm in EN 1995-1-1 have to be considered.

Table B6.1: Laterally loaded screws: Minimum end- and edge distances for Solid Timber and Glued Laminated Timber products with a maximum gross density of 480 kg/m³ for non-predrilled applications

Head shapes and applications (see Table B5.1)	Solid Timber and Glued Laminated Timber (ST-c, FST-c, GST-c, GLT-c, BGLT-c)					
	Minimum spacings and distances					
	a_1	a_2	$a_{3,c}$	$a_{3,t}$	$a_{4,c}$	$a_{4,t}$
	$5 \cdot (1+\lvert\cos\alpha\rvert) \cdot d$	$5 \cdot d$	$7 \cdot d$	$(7+5 \cdot \cos\alpha) \cdot d$	$5 \cdot d$	$(5+2 \cdot \sin\alpha) \cdot d$
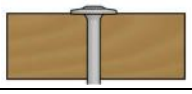	$5 \cdot (1+\lvert\cos\alpha\rvert) \cdot d$	$5 \cdot d$	$7 \cdot d$	$(5+5 \cdot \cos\alpha) \cdot d$	$5 \cdot d$	$(5+2 \cdot \sin\alpha) \cdot d$
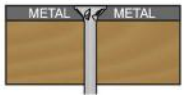	$3{,}5 \cdot (1+\lvert\cos\alpha\rvert) \cdot d$	$3{,}5 \cdot d$	$7 \cdot d$	$(5+5 \cdot \cos\alpha) \cdot d$	$5 \cdot d$	$(5+2 \cdot \sin\alpha) \cdot d$

Figures not to scale

Axially loaded screws
Minimum distances and spacings for exclusively axially loaded »fischer PowerFast II« screws, in non-predrilled holes in members of Solid Timber (ST-c, FST-c and GST-c), Glued Laminated Timber (GLT-c) or similar glued products with a minimum thickness $t = 10 \cdot d$ and a minimum width of $8 \cdot d$ or 60 mm, whichever is the greater, may be taken as given in Table B6.2.

Table B6.2: Axially loaded screws: Minimum end- and edge distances for Solid Timber and Glued Laminated Timber products, with a maximum gross density of 480 kg/m³ for non-predrilled applications.

Head shapes and applications (see Table B5.1)	Solid Timber and Glued Laminated Timber (ST-c, FST-c, GST-c, GLT-c, BGLT-c)			
	Minimum spacings and distances			
	a_1	a_2	$a_{1,CG}$ [1)]	$a_{2,CG}$ [1)]
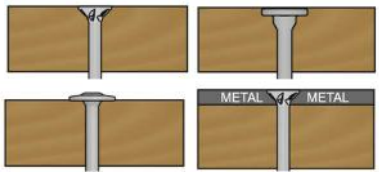	$5 \cdot d$	$5 \cdot d$	$9 \cdot d$	$4 \cdot d$

[1)] CG … Distance to the centre of gravity of the penetration length of the threaded part of the screw in the timber element according to EN 1995-1-1, Table 8.6

Figures not to scale

Specifications of the intended use

Minimum timber cross section, end- and edge distances
Material: Cross Laminated Timber (CLT)

Table B7.1: Minimum distances and spacings, notations for Cross Laminated Timber

Notations for applications in the plane surface (see Figure D3.1)		
a_1	Spacing a_1 parallel to the plane direction of the CLT-panel	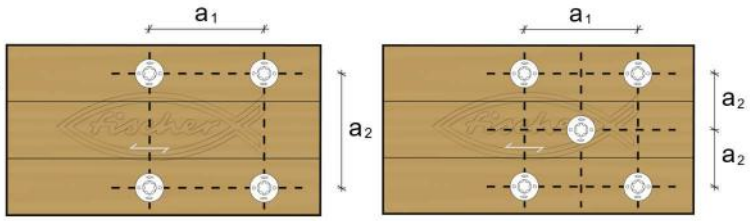
a_2	Spacing a_2 perpendicular to the plane direction of the CLT-panel	
$a_{3,c}$	Distance $a_{3,c}$ from centre of the screw-part in timber to the unloaded edge in plane direction of the CLT-panel	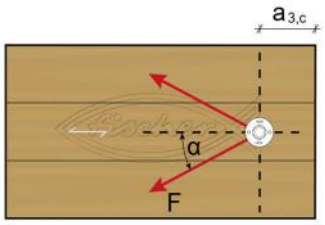
$a_{3,t}$	Distance $a_{3,t}$ from centre of the screw-part in timber to the loaded edge in plane direction of the CLT-panel	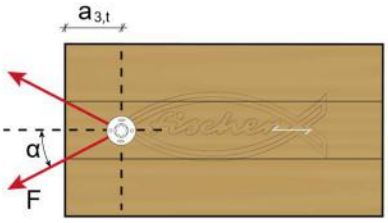
$a_{4,c}$	Distance $a_{4,c}$ from centre of the screw-part in timber to the unloaded edge perpendicular to the plane direction of the CLT-panel	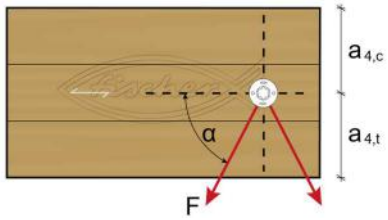
$a_{4,t}$	Distance $a_{4,t}$ from centre of the screw-part in timber to the loaded edge perpendicular to the plane direction of the CLT-panel	
Notations for applications in the edge surface (see Figure D3.1)		
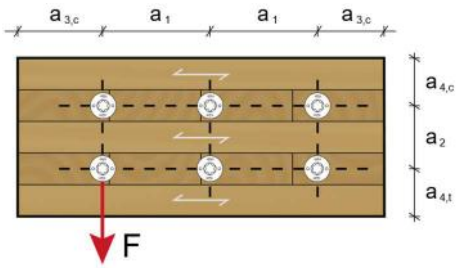		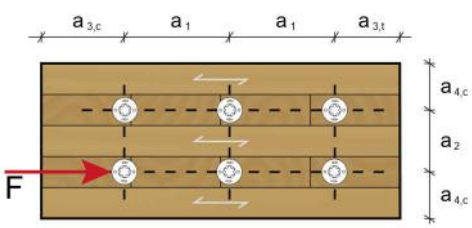

Figures not to scale

Specifications of the intended use

Minimum distances and spacings
Material: Cross Laminated Timber (CLT)

Laterally and axially loaded screws:

Unless specified otherwise in the technical specification (ETA or hEN) of Cross Laminated Timber, minimum distances and spacings for screws in the plane surface of Cross Laminated Timber members with a minimum thickness $t = 10 \cdot d$ may be taken as shown in Table B8.1 and Table B8.2.

Table B8.1: Minimum end- and edge distances for Cross Laminated Timber in the plane surface

Cross Laminated Timber, Screws in the plane surface (CLT)						
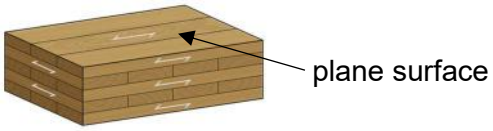						
Head shapes and applications (see Table B5.1)	Minimum spacings and distances					
	a_1	a_2	$a_{3,c}$	$a_{3,t}$	$a_{4,c}$	$a_{4,t}$
	4·*d*	2,5·*d*	6·*d*	6·*d*	3,5·*d*	6·*d*
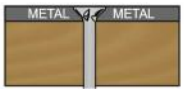	3·*d*	2,0·*d*	6·*d*	5·*d*	3,5·*d*	6·*d*

Figures not to scale

Unless specified otherwise in the technical specification (ETA or hEN) of Cross Laminated Timber, minimum distances and spacing for screws in the edge surface of Cross Laminated Timber members with a minimum thickness $t = 10 \cdot d$ and a minimum penetration depth perpendicular to the edge surface of $10 \cdot d$ may be considered.

Table B8.2: Minimum end- and edge distances for Cross Laminated Timber in the edge surface

Cross Laminated Timber, Screws in the edge surface						
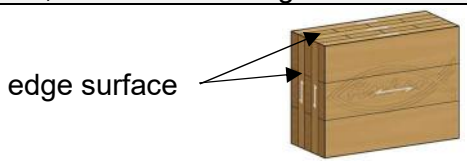						
Head shapes and applications (see Table B5.1)	Minimum spacings and distances					
	a_1	a_2	$a_{3,c}$	$a_{3,t}$	$a_{4,c}$	$a_{4,t}$
	10·*d*	3·*d*	7·*d*	12·*d*	5·*d*	5·*d*
	7·*d*	3·*d*	7·*d*	12·*d*	5·*d*	5·*d*

Figures not to scale

Performance of the product and references to the methods used for its assessment

Performance of the PowerFast II screws itself (single product)

Table C1.1: Characteristic values of the load-carrying capacities of fischer PowerFast II - Chipboard screws

Outer thread diameter	***d***	**[mm]**	**3,0**	**3,5**	**4,0**	**4,5**	**5,0**	**6,0**
Characteristic strength parameters								
Tensile strength	$f_{tens,k}$	[kN]	3,2	4,1	5,2	6,3	8,9	13,1
Torsional strength	$f_{tor,k}$	[Nm]	1,5	2,0	3,0	4,2	6,0	10,0
Yield moment	$M_{y,Rk}$	[Nmm]	1654	2489	3546	4844	6405	10384
Yield strength	$f_{y,k}$	[N/mm²]	1050					
Characteristic stiffness parameters								
Modulus of elasticity	E_s	[N/mm²]	210.000					
Assessed performances								
Bending angle		[°]	No breaking has been observed at a bending angle of $\alpha \leq 45°/d^{0,7}+20°$					
Safety factor insertion moment		[-]	Ratio of the characteristic torsional strength to the mean insertion moment: $f_{tor,k} / R_{tor,mean} \geq 1,5$ *Note: Reference density of the timber 480 kg/m³*					

Table C1.2: Characteristic values of the load-carrying capacities of fischer PowerFast II – Wood Construction screws

Outer thread diameter	***d***	**[mm]**	**8,0**	**10,0**	**12,0**	
Characteristic strength parameters						
Tensile strength	$f_{tens,k}$	[kN]	23,0	31,0	42,0	
Torsional strength	$f_{tor,k}$	[Nm]	28,0	42,0	64,0	
Yield moment	$M_{y,Rk}$	[Nmm]	22200	37400	59900	
Yield strength	$f_{y,k}$	[N/mm²]	975			
Characteristic stiffness parameters						
Modulus of elasticity	E_s	[N/mm²]	210.000			
Assessed performances						
Bending angle		[°]	No breaking has been observed at a bending angle of $\alpha \leq 45°/d^{0,7}+20°$			
Safety factor insertion moment		[-]	Ratio of the characteristic torsional strength to the mean insertion moment: $f_{tor,k} / R_{tor,mean} \geq 1,5$ *Note: Reference density of the timber 480 kg/m³*			

Note: The tear-off capacity of the screw head is greater than the tensile capacity of the screw

fischer PowerFast II screws for the structural use in timber constructions

1 Mechanical Resistance and Stability

The load-carrying capacities for the »fischer PowerFast II« screws are applicable to the wood-based materials mentioned in Annex B, even though the term *»timber«* has been used in the following. European Technical Assessments for structural members or wood-based panels must be considered if applicable.

The characteristic lateral load-carrying capacities and the characteristic axial withdrawal capacities of »fischer PowerFast II« screws should be used for designs in accordance with EN 1995-1-1 or an appropriate valid national code.

ETA's for structural members or wood-based panels must be considered where applicable.

For screws arranged under an angle between screw axis and grain-direction $\varepsilon \leq 15°$ (see Figure D2.1), the threaded penetration length (inclusive the tip of the screw) has to fulfill equation (1).

$$l_{ef} = \min \begin{cases} \dfrac{4 \cdot d}{\sin \varepsilon} \\ 20 \cdot d \end{cases} \tag{1}$$

For screws arranged under an angle between screw and grain-direction $15° < \varepsilon \leq 90°$ the minimum threaded penetration length must be $l_{ef} \geq 4 \cdot d$ (see also Figure D2.1). For the fixing of rafters or similar building parts, the point side penetration length must be at least 40 mm (i.e. $l_{ef} \geq 40$ mm).

Reductions in the cross-sectional area caused by »fischer PowerFast II« screws shall be considered in accordance to the EN 1995-1-1, section 5.2.

fischer PowerFast II screws for the structural use in timber constructions

1.1 Lateral load-carrying capacity $F_{v,Rk}$

The characteristic lateral load-carrying capacity of »fischer PowerFast II« screws shall be calculated according to EN 1995-1-1. The contribution of the rope effect may be considered, if only lateral loads (no axial loads) are acting on the screws. For the calculation of the load-carrying capacity, the following parameters should be taken into account. Figure D2.1 shows the definition of the necessary angles which consider the angle between load and grain-direction α, the angle between the surface of wide face of the structural element and the screw axis β and the angle between the screw axis and the grain-direction ε.

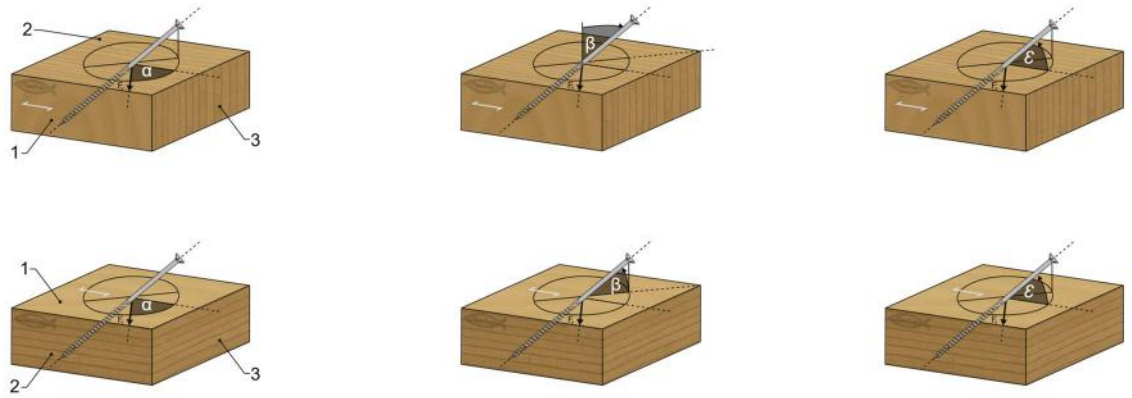

(1)	Wide face	α	Angle between grain-direction and acting load [°]
(2)	Edge face	β	Angle between screw axis and the surface of the wide face [°]
(3)	End grain	ε	Angle between screw axis and grain-direction [°]
		F_v	Lateral force in the wide or edge face plane

Figure D2.1: Notations for angles in SWB, LVL, SB and WFB (figures not to scale)

1.1.1 Embedment strength $f_{h,\varepsilon,k}$ for the use in Structural Timber (ST-c/d, FST-c/d and GST-c/d, BGLT) and Parallel Laminated Timber (GLT-c)

The embedment strength for »fischer PowerFast II« screws in non-predrilled holes arranged at an angle between screw axis and grain-direction, $0° \leq \varepsilon \leq 90°$ for structural timber elements with $\rho_k \leq 730$ kg/m³ can be calculated with the help of equation (2) and for predrilled applications with the help of equation (3)

$$f_{h,\varepsilon,k} = \frac{0{,}019 \cdot \rho_k^{1{,}24} \cdot d^{-0{,}3}}{2{,}5 \cdot \cos^2 \varepsilon + \sin^2 \varepsilon} \tag{2}$$

$$f_{h,\varepsilon,k} = \frac{0{,}082 \cdot \rho_k \cdot (1 - 0{,}01 \cdot d)}{2{,}5 \cdot \cos^2 \varepsilon + \sin^2 \varepsilon} \tag{3}$$

Note: Screws parallel to the end-grain-direction stressed perpendicular to the screw axis ($\varepsilon = 0°$) are only allowed for short-time loads.

fischer PowerFast II screws for the structural use in timber constructions

1.1.2 Embedment strength $f_{h,k}$ for the use in Cross Laminated Timber (CLT-c)

If there are no other technical specification (ETA) for Cross Laminated Timber (CLT-c), the embedment strength for screws can be calculated as stated below. The following specifications are only applicable for screws with a diameter *d* of at least 6 mm, possible influences of gaps between the single lamellas have to be considered.

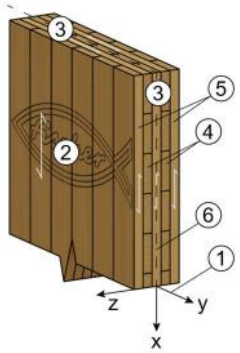

(1) Element plane
(2) Plane surface
(3) Edge surface (Narrow side)
(4) Inner layer (Inner lamellas)
(5) Outer layer (Outer lamellas)
(6) Middle layer (Middle lamella)

Figure D3.1: Notations CLT-elements (figure not to scale)

Screws in the plane surface

The embedment strength for screws in the plane surface of CLT-elements should be assumed as for Solid Timber according to equation (2), based on the characteristic density of the outer layer.

Screws in the edge (narrow) side

The embedment strength for screws in the narrow side of CLT-elements should be assumed according to equation (4).

$$f_{h,k} = 20 \cdot d^{-0,5} \tag{4}$$

1.1.3 Embedment strength $f_{h,\beta,\varepsilon,k}$ for the use in Laminated Veneer Lumber in softwood (LVL-c)

The embedment strength for »fischer PowerFast II« screws arranged at an angle between screw axis and grain-direction ε and an angle between screw axis of wide surface of the LVL β for $d \leq 12$ mm can be calculated with equation (5) for non-predrilled holes

$$f_{h,\beta,\varepsilon,k} = \frac{0,082 \cdot \rho_k \cdot d^{-0,3}}{(\sin^2 \beta + k_2 \cdot \cos^2 \beta) \cdot (\sin^2 \varepsilon + 2,5 \cdot \cos^2 \varepsilon)} \tag{5}$$

and for predrilled holes

$$f_{h,\beta,\varepsilon,k} = \frac{0,082 \cdot \rho_k \cdot (1 - 0,01 \cdot d)}{(\sin^2 \beta + k_2 \cdot \cos^2 \beta) \cdot (\sin^2 \varepsilon + 2,5 \cdot \cos^2 \varepsilon)} \tag{6}$$

with

$$k_2 = \begin{cases} 1 & \text{for LVL-P} \\ \min \begin{cases} d/(d-2) \\ 3 \end{cases} & \text{for LVL-C} \end{cases} \tag{7}$$

fischer PowerFast II screws for the structural use in timber constructions

1.1.4 Embedment strength $f_{h,\alpha,\beta,k}$ for use in Laminated Veneer Lumber in hardwood LVL-d according to (ETA-14/0354)

The embedment strength for »fischer PowerFast II« screws arranged at an angle between load and grain-direction, 0° ≤ α ≤ 90° can be calculated with the help of equation (8). Screws with d > 8 mm should be predrilled.

$$f_{h,\alpha,\beta,k} = \frac{f_{h,k}}{(k_{90} \cdot \sin^2 \alpha + \cos^2 \alpha) \cdot (\sin^2 \beta + k_1 \cdot \cos^2 \beta)} \tag{8}$$

with

$$k_{90} = 0{,}5 + 0{,}024 \cdot d$$
$$k_1 = \begin{cases} 1{,}2 & \text{for LVL-P in hardwood} \\ \min \begin{cases} d/(d-2) \\ 3 \end{cases} & \text{for LVL-C in hardwood} \end{cases} \tag{9}$$

Where

d	Outer diameter of the screw [mm]
$f_{h,\alpha,\beta,k}$	Characteristic embedment strength for screws d ≤ 12 mm in LVL-d [N/mm²]
$f_{h,\beta,\varepsilon,k}$	Characteristic embedment strength for screws d ≤ 12 mm in LVL-c [N/mm²]
$f_{h,\varepsilon,k}$	Characteristic embedment strength for screws d ≤ 12 mm in ST-c, FST, GLT, BGLT [N/mm²]
$f_{h,k}$	Characteristic value of the embedment strength according to Table D5.1 [N/mm²]
k_{90}	Factor to consider influences of the diameter [-]
k_1, k_2, k_3	Factors to consider influences of the diameter and material [-]
α	Angle between grain-direction and acting load [°]
β	Angle between screw axis and surface [°]
ε	Angle between screw axis and grain-direction [°]
ρ_k	Characteristic gross density of the wood-based element [kg/m³]

fischer PowerFast II screws for the structural use in timber constructions

1.1.5 Embedment strength $f_{h,k}$ for the use in Oriented Strand Boards (OSB), Plywood (PLY), Fibreboards (HB, MB, SB), Particleboards (RPB) in the plane surface

The embedment strength for »fischer PowerFast II« screws in non-predrilled holes if no other regulations are given, arranged at an angle β = 90° to the plane surface can be calculated with the help of Table D5.1.

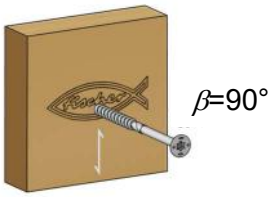

Figure D5.1: Screw arrangement in the plane surface of WBP (figure not to scale)

Table D5.1: Characteristic values of the embedment strength in the plane surface of OSB, HB, MB, SB, PLY and RPB

Outer thread diameter [mm]	***d***	**3,5 mm – 6,0 mm**
Material	**Embedment parameters in the plane surface [N/mm²]**	
OSB t > 5 mm (EN 300)	$f_{h,k}$=	$48 \cdot d^{-0,7} \cdot t^{0,1}$
EGGER OSB 4 TOP predrilled t > 10 mm, (EN 13986)	$f_{h,k}$=	$50 \cdot d^{-0,6} t^{0,2}$
EGGER OSB 4 TOP without pre-drilling t >10 mm, (EN 13986)	$f_{h,k}$=	$65 \cdot d^{-0,7} \cdot t^{0,1}$
Plywood PLY t > 4 mm (EN 314-2)	$f_{h,k}$=	$65 \cdot d^{-0,7} \cdot t^{0,1}$
Fibreboard hard (HB) t > 3 mm (EN 622-2)	$f_{h,k}$=	$30 \cdot d^{-0,3} \cdot t^{0,6}$
Fibreboard medium (MB) t > 3 mm (EN 622-3)	$f_{h,k}$=	$28 \cdot d^{-0,6} \cdot t^{0,6}$
Fibreboard soft (SB) 150 ≤ ρ_k ≤ 300 kg/m³ 18 mm ≤ t ≤ 60 mm	$f_{h,k}$=	$4 \cdot 10^{-4} \cdot t \cdot \rho_k^{1,2}$
Fibreboard soft (SB) ρ_k < 150 kg/m³	$f_{h,k}$=	$15 \cdot 10^{-5} \cdot d^{-075} \cdot \rho_k^{2}$
Particleboards (RPB) t > 5 mm (EN 312)	$f_{h,k}$=	$50 \cdot d^{-0,6} \cdot t^{0,2}$
Gypsum plasterboard t ≥ 9 mm (EN 520)	$f_{h,k}$=	$3,9 \cdot d^{-0,6} \cdot t^{0,7}$
Gypsum board with fibrous reinforcement t ≥ 9 mm (EN 15283-2)	$f_{h,k}$=	$7,8 \cdot d^{-0,2} \cdot t^{0,7}$

fischer PowerFast II screws for the structural use in timber constructions

1.1.6 Embedment strength $f_{h,k}$ for the use in Oriented Strand Boards (OSB), Plywood (PLY), Fibreboards (HB, MB, SB), Particleboards (RPB) in the edge surface

The embedment strength for »fischer PowerFast II« screws, if no other regulations are given, arranged at an angle β = 0° to the plane surface can be calculated with the help of Table D6.1.

Figure D6.1: Screw arrangement in the narrow surface of WBP (figure not to scale)

Table D6.1: Characteristic values of the embedment strength in the edge surface of OSB

Outer thread diameter [mm]	***d***	**≤ 5,0 mm**
Material	**Embedment parameters in the edge surface [N/mm²]**	
EGGER OSB 4 TOP, predrilled t >10 mm Load parallel to plane (EN 13986)	$f_{h,k}$=	$50 \cdot d^{-0,6} t^{0,2}$
EGGER OSB 4 TOP, without predrilling t >10 mm Load prallel to plane (EN 13986)	$f_{h,k}$=	$65 \cdot d^{-0,7} \cdot t^{0,1}$
EGGER OSB 4 TOP, predrilled t >10 mm Load normal to plane (EN 13986)	$f_{h,k}$=	$65 \cdot d^{-0,7} \cdot t^{0,1}$
EGGER OSB 4 TOP, without predrilling t >10 mm Load normal to plane (EN 13986)	$f_{h,k}$=	$30 \cdot d^{-0,3} \cdot t^{0,6}$

fischer PowerFast II screws for the structural use in timber constructions

1.1.7 Embedment strength $f_{h,k}$ for the use in combination with predrilled steel plates

The characteristic embedment strength of »fischer PowerFast II« screws in steel plates can be taken like following into account.

$$f_{h,k} = k_{pl} \cdot 600 \text{ [N/mm²]} \tag{10}$$

with

k_{pl}=1,0 for inner steel plates
k_{pl}=0,5 for the ratio t / d ≤ 0,5 for outer steel plates
k_{pl}=1,0 for the ratio t / d > 1,0 for outer steel plates
Intermediate values should be linearly interpolated

Note: The 600 N/mm² should be used for any steel and may be different for other materials. The metal plate should be verified in accordance to the corresponding Eurocode (e. g. EN 1993-1-1, EN 1993-1-8, EN 1999-1-1).

1.1.8 Effective number of screws each row n_{ef}

Splitting along the grain of a row of PowerFast II screws, should be considered by the effective number of fasteners n_{ef}.
For laterally loaded screws with d < 12 mm, the following rules for multiple fastener connections should be applied.

$$n_{ef} = n^{k_{ef}} \tag{11}$$

Table D7.1: Values for k_{ef} for SL, PL, CL and in the plane surface of LVL and GLVL

Distance	Materials	k_{ef} non-predrilled	k_{ef} predrilled
$a_1 \geq 14 \cdot d$	SL, PL, CL and in the plane surface of LVL and GLVL	1,0	1,0
$a_1 \geq 10 \cdot d$		0,85	0,85
$a_1 \geq 7 \cdot d$		0,7	0,7
$a_1 \geq 4 \cdot d$		-	0,5
For intermediate spacings, linear interpolation of k_{ef} may be applied			
-	in the narrow surface of LVL and GLVL	$k_{ef} = \min \begin{cases} 1 - 0,03 \cdot \left(20 - \frac{a_1}{d}\right) \\ 1 \end{cases}$	
For intermediate spacings, linear interpolation of k_{ef} may be applied			

For fischer PowerFast II screws with d ≤ 8 mm staggered at least by 1·d without predrilling the spacing a_1 may be doubled for the determination of n_{ef}.

Figure D7.1: Staggered arrangement of the screws parallel to the grain direction (figure not to scale)

The effective number of fasteners loaded perpendicular to grain should be taken as n_{ef} = n_{90}.

fischer PowerFast II screws for the structural use in timber constructions

For laterally loaded screws with $d \geq 12$ mm, the following rules for multiple fastener connections should be applied.

$$n_{ef} = \min \begin{cases} n \\ n^{0,9} \cdot \sqrt[4]{\dfrac{a_1}{13 \cdot d}} \end{cases} \quad \text{in SL, PL and CL} \tag{12}$$

$$n_{ef} = \min \begin{cases} n \\ n^{0,9} \cdot \sqrt[4]{\dfrac{t \cdot a}{50 \cdot d^2}} \end{cases} \quad \text{in LVL ang GLVL} \tag{13}$$

with

$$a = \begin{cases} a_3 & \text{when n=1} \\ \min \begin{cases} a_1 \\ a_{3,t} \end{cases} & \text{when n}\geq\text{2} \end{cases} \tag{14}$$

$$t = \begin{cases} \min \begin{cases} t_1 \\ t_2 \end{cases} & \text{for single shear connection} \\ \min \begin{cases} 2 \cdot t_1 \\ 2 \cdot t_2 \\ t_{ms} \end{cases} & \text{for double shear connection} \end{cases} \tag{15}$$

Where

n_0	Number of fasteners parallel to grain
a_1	Spacing parallel to grain
$a_{3,t}$	Loaded end distance parallel to grain
d	Nominal Diamter of fischer PowerFast II screws
t_1 and t_2	thicknesses of the outer timber members
t_{ms}	thickness of the inner member of double shear connections or the smallest thickness of the inner member of multiple shear plane connections

1.2 Axial resistance of the screw under tension $F_{ax,t,Rd}$

The design axial tensile resistance $F_{ax,t,Rd}$ for a group of axially loaded screws is limited by the head pull-through parameter, the withdrawal capacity and the tensile capacity of the screw itself and should be considered as following.

$$F_{ax,t,Rd} = \min \begin{cases} n_{ef} \cdot F_{ax,t,Rd,1} \\ n \cdot F_{ax,t,Rd,2} \end{cases} \tag{16}$$

with

$$F_{ax,t,Rd,1} = \frac{k_{mod}}{\gamma_M} \cdot \min \begin{cases} \text{Headside: } \max\left\{F_{head,Rk}; F_{ax,\alpha,Rk}\right\} \\ \text{Tipside: } F_{ax,\alpha,Rk} \end{cases} \tag{17}$$

and

$$F_{ax,t,Rd,2} = \frac{f_{tens,k}}{\gamma_{M,2}} \tag{18}$$

Where

k_{mod}	Modification factor see also EN 1995-1-1 [-]
n	Number of screws in a connection [-]
n_{ef}	Effective number of screws in a connection [-]
γ_M	Partial factor for the screw, see EN 1995-1-1; *Note: Recommended value γ_M=1,30*
$F_{head,Rk}$	Characteristic head pull-through resistance in according to see Annex D16 [N]
$F_{ax,\alpha,Rk}$	Characteristic withdrawal resistance according Annex D11, D12, D13, D14 [N]
$F_{ax,t,Rd}$	Design withdrawal resistance [N]
$F_{ax,t,Rd,1}$	Design withdrawal resistance on the timber side [N]
$F_{ax,t,Rd,2}$	Design tension strength of the screw itself [N]
$f_{tens,k}$	Characteristic tensile strength of the »fischer PowerFast II« screws, see Table C1.1 and C1.2 [N], *Note: Values in Table C1.1 and C1.2 are given in [kN]*
$\gamma_{M,2}$	Partial factor for resistance of cross-sections of a metal fastener in tension to fracture, see EN 1993-1-8; *Note: Recommended value $\gamma_{M,2}$=1,25*

1.2.1 Withdrawal capacity $F_{ax,\alpha,Rk}$ for use in Structural Timber (ST-c, FST and GST) and Parallel Laminated Timber (GLT-c)

In Structural Timber (ST-c) and Glued Laminated Timber of softwood (GLT-c), the characteristic withdrawal capacities of »fischer PowerFast II« screws, with an angle of 0° ≤ ε ≤ 90° for self-tapping screws shall be calculated according to equation (19) or (20).

$$F_{ax,\alpha,Rk} = k_{ax} \cdot f_{ax,k} \cdot d \cdot l_{ef} \cdot \left(\frac{\rho_k}{350}\right)^{0,8} \tag{19}$$

$$F_{ax,\alpha,Rk} = k_{ax} \cdot f_{ax,k} \cdot d \cdot l_g \cdot \left(\frac{\rho_k}{350}\right)^{0,8} \tag{20}$$

with

$$k_{ax} = \min \begin{cases} 0,3 + (0,7 \cdot \varepsilon)/45° \\ 1,00 \end{cases} \tag{21}$$

fischer PowerFast II screws for the structural use in timber constructions

For screws arranged under an angle between screw axis and grain-direction $\varepsilon \leq 15°$ (see Figure D2.1), the threaded penetration length (inclusive the tip of the screw) has to fulfil equation (22).

$$l_{ef} = \min \begin{cases} \dfrac{4 \cdot d}{\sin \varepsilon} \\ 20 \cdot d \end{cases} \tag{22}$$

For screws arranged under an angle between screw and grain-direction $15° < \varepsilon \leq 90°$ the minimum threaded penetration length must be $l_{ef} \geq 4 \cdot d$. For the fixing of rafters or similar building parts, the point side penetration length must be at least 40 mm (i.e. $l_{ef} \geq 40$ mm).

1.2.2 Withdrawal capacity $F_{ax,\alpha,Rk}$ for use in Structural Timber (ST-d, GLT-d) and Laminated Veneer Lumber (LVL-d) according to ETA-14/0354

The characteristic withdrawal capacity of »fischer PowerFast II« screws in Structural Timber (ST-d, GLT-d) and Laminated Veneer Lumber in hardwood (LVL-d) according to ETA-14/0354 with an angle of $0° \leq \varepsilon \leq 90°$ shall be calculated according to equation (23) or (24).

$$F_{ax,\alpha,Rk} = k_{ax} \cdot f_{ax,k} \cdot d \cdot l_{ef} \cdot \left(\frac{\rho_k}{730} \right)^{0,8} \tag{23}$$

$$F_{ax,\alpha,Rk} = k_{ax} \cdot f_{ax,k} \cdot d \cdot l_{g} \cdot \left(\frac{\rho_k}{730} \right)^{0,8} \tag{24}$$

with

$$k_{ax} = \min \begin{cases} 0,3 + (0,7 \cdot \varepsilon) / 45° \\ 1,00 \end{cases} \tag{25}$$

The penetration length in hardwood has to be at least $l_{ef} \geq 4 \cdot d$.

Where

d	Outer thread diameter of the screw [mm]
$f_{ax,k}$	Characteristic withdrawal strength parameter, see Table D11.1 and D11.2 [N/mm²]
k_{ax}	Factor to consider the influence between the angle of the screw axis and the grain-direction [-]
l_{ef}	Penetration length of the threaded part of the screw, including the screw head and/or screw tip [mm]
l_g	$l_g = l_{gp} - l_t$ [mm] Penetration length of the threaded part of the screw with d = const. Values for l_t see Annex A; l_t …length of the screw tip [mm]
n_{ef}	Effective number of screws, see Annex D15 [-]
$F_{ax,\alpha,Rk}$	Characteristic withdrawal capacity of the screw with an angle α to the grain-direction [N]
ε	Angle between grain-direction and the screw axis [°], see Figure D2.1
ρ_k	Characteristic gross density of the timber/wood based member [kg/m³]

fischer PowerFast II screws for the structural use in timber constructions

Table D11.1: Characteristic values of »fischer PowerFast II – Chipboard screws« of the withdrawal strength parameter in Structural Timber in softwood and Laminated Veneer Lumber according to ETA-14/0354, referred to l_{ef}

Outer thread diameter *d* [mm] Values referred to the effective length l_{ef}, see equations (19) and (23)			**3,0**	**3,5**	**4,0**	**4,5**	**5,0**	**6,0**
Product	**Abbreviation**	**Parameter**	**Withdrawal capacity [N/mm²]**					
Structural Timber Parallel Laminated Timber	*ST-c, ST-d, FST, GST, GLT-c, BGLT, SWP-P, CLT*	$f_{ax,k}$	15,5	14,9	14,5	14,1	13,8	12,9
LVL according to ETA-14/0354 (see Figure D10.1)	*LVL*	$f_{ax,90\|90,k}$	-	-	-	-	40,0	32,0
		$f_{ax,90\|00,k}$	-	-	-	-	32,0	24,0
		$f_{ax,00\|00,k}$	-	-	-	-	32,0	24,0
Giant Bamboo		$f_{ax,k}$	-	-	-	-	-	30,0

Table D11.2: Characteristic values of »fischer PowerFast II – Wood Construction screws« of the withdrawal strength parameter in Structural Timber in softwood and Laminated Veneer Lumber according to ETA-14/0354, referred to l_{ef}

Outer thread diameter *d* [mm] Values referred to the effective length l_{ef}, see equations (19) and (23)			**8,0**	**10,0**	**12,0**	
Product	**Abbreviation**	**Parameter**	**Withdrawal capacity [N/mm²]**			
Structural Timber Parallel Laminated Timber	*ST-c, ST-d, FST, GST, GLT-c, BGLT, SWP-P*	$f_{ax,k}$	12,0	11,5	10,3	
Cross Laminated Timber in the plane surface	*CLT*	$f_{ax,k}$	12,0	11,5	10,3	
LVL according to ETA-14/0354 (see Figure D10.1)	*LVL*	$f_{ax,90\|90,k}$	30,0	28,0	-	
		$f_{ax,90\|00,k}$	22,0	20,0	-	
		$f_{ax,00\|00,k}$	22,0	20,0	-	

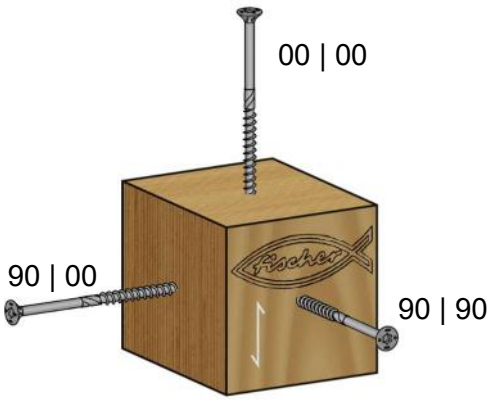

Figure D11.1: fischer PowerFast II in LVL-d (figure not to scale)

fischer PowerFast II screws for the structural use in timber constructions

Table D12.1: Characteristic values of »fischer PowerFast II – Chipboard screws« and »fischer PowerFast II - Wood Construction screws« of the withdrawal strength parameter in Structural Timber in softwood and Laminated Veneer Lumber according to ETA-14/0354, referred to l_g

Outer thread diameter *d* [mm] **Values referred to the threaded length with constant diameter l_g,** **see equation (20) and (24)**			**6,0**	**8,0**	**10,0**	**12,0**	
Product	**Abbreviation**	**Parameter**	**Withdrawal capacity [N/mm²]**				
Structural Timber Parallel Laminated Timber	*ST-c, FST, GST, GLT-c, GLT-d, BGLT, SWP-P*	$f_{ax,k}$	20,0	15,0	13,5	-	
LVL according to ETA-14/0354	*LVL*	$f_{ax,90\|90,k}$	48,0	-	-	-	
		$f_{ax,90\|00,k}$	44,6	-	-	-	
		$f_{ax,00\|00,k}$	31,6	-	-	-	

The characteristic axial withdrawal capacity of »fischer PowerFast II« screws with an angle of α = 90 | 90 in wood-based panels with a minimum thickness and/or a penetration depth of the threaded part of at least *4·d* can be calculated according to equation (26) for applications in the plane surface.

$$F_{ax,\alpha,Rk} = n_{ef} \cdot f_{ax,90|90,k} \cdot d \cdot l_{ef} \tag{26}$$

Where

d Outer thread diameter of the screw [mm]
$f_{ax,90|90,k}$ Characteristic withdrawal parameter in the plane surface [N/mm²]
n_{ef} Effective number of screws, see Annex D15 [-]
l_{ef} Penetration length of the threaded part of the screw, including the screw head and/or screw tip [mm]

Table D12.2: Characteristic values of »fischer PowerFast II – Chipboard screws« of the withdrawal strength parameter in the plane surface of derived wood panels, referred to l_{ef}

Outer thread diameter *d* [mm] **Values referred to the effective length l_{ef},** **see equations (19) and (23)**			**3,0**	**3,5**	**4,0**	**4,5**	**5,0**	**6,0**
Product	**Abbreviation**	**Parameter**	**Withdrawal capacity [N/mm²]**					
Oriented strand board (EN 300)	*OSB*	$f_{ax,k}$	9,3	9,0	8,6	8,3	8,0	7,1
Particleboard (EN 312)	*RPB*	$f_{ax,k}$	11,9	11,1	10,3	9,5	8,7	7,1
Fibreboards (EN 622-2)	*HB*	$f_{ax,k}$	13,2	12,4	11,6	10,8	10,0	8,5
Laminated veneer lumber (EN 14374)	*LVL-C*	$f_{ax,k}$	16,0	15,4	14,7	14,0	13,3	12,0

fischer PowerFast II screws for the structural use in timber constructions

The characteristic axial withdrawal capacity of »fischer PowerFast II« screws for predrilled applications in the edge surface with an angle α = 90 | 00 (see Figure D11.1) in wood-based panels with a thickness of at least *5·d* arranged in the center of the thickness of the panel with a penetration depth of the threaded part of the screws of at least *6·d* can be calculated according to equation (27).

$$F_{ax,\alpha,Rk} = n_{ef} \cdot f_{ax,90|00,k} \cdot d \cdot l_{ef} \quad (27)$$

Where

d	Outer thread diameter of the screw [mm]
$f_{ax,90\|00,k}$	Characteristic withdrawal parameter in the edge surface [N/mm²]
n_{ef}	Effective number of screws, see Annex D15 [-]
l_{ef}	Penetration length of the threaded part of the screw, including the screw head and/or screw tip [mm]

Table D13.1: Characteristic values of »fischer PowerFast II – Chipboard screws« of the withdrawal strength parameter in the edge surface of derived wood panels, referred to l_{ef}

Outer thread diameter *d* [mm] Values referred to the effective length l_{ef}, see equations (19) and (24)			**4,0**	**4,5**	**5,0**	**6,0**
Product	**Abbreviation**	**Parameter**	**Withdrawal capacity [N/mm²]**			
Oriented strand board (EN 300)	*OSB*	$f_{ax,k}$	6,0	5,8	5,6	5,1
Particleboard (EN 312)	*RPB*	$f_{ax,k}$	5,6	5,4	5,2	4,7
Fibreboards (EN 622-2)	*HB*	$f_{ax,k}$	7,0	6,5	6,0	5,1
Laminated veneer lumber (EN 14374)	*LVL-C*	$f_{ax,k}$	9,2	8,8	8,4	7,5

fischer PowerFast II screws for the structural use in timber constructions

1.2.3 Withdrawal capacity $F_{ax,Rk}$ for use in Cross Laminated Timber (CLT)

If there are no other technical specification (ETA or hEN) for Cross Laminated Timber (CLT), the withdrawal capacity for screws can be calculated as following.

Screws in the plane surface

The withdrawal capacity for screws with $d \geq 6$ mm in the plane surface of CLT-c elements should be assumed as for Structural Timber according to equation (19) based on a characteristic density in accordance to equation (28), if there are no other specifications given. If necessary, gaps between the single lamellas have to be considered.

$$\rho_k = 1{,}1 \cdot \rho_{lay,k} \tag{28}$$

Where

ρ_{lk} Characteristic density for the calculation in equation (19) [kg/m³]

$\rho_{lay,k}$ Lowest characteristic density of the lamellas in a layer of the CLT-c element [kg/m³]

Screws in the narrow side

The withdrawal capacity for screws in the narrow side of CLT-elements should be assumed according to equation (29).

$$F_{ax,Rk} = 20 \cdot d^{0,8} \cdot l_{ef}{}^{0,9} \tag{29}$$

If possible, the screws in the narrow side should be driven perpendicular into the grain-direction of the lamella. To avoid unwanted effects by screwing in only parallel to the grain direction, and gaps between lamellas in the narrow side of CLT panels, the considered penetration length l_{ef} in equation (29) should be decreased by $3 \cdot d$ (for calculation only).

If it is guaranteed that the angle between the grain-direction of the lamellas and the screw axis is ≥ 30°, the characteristic withdrawal capacity from equation (29) can be increased of about 25 %.

For screws penetrating more than one layer of Cross Laminated Timber, the different layers may be considered proportionally.

fischer PowerFast II screws for the structural use in timber constructions

1.2.4 Effective number of screws n_{ef}

For axially loaded screws in tension, where the external force is parallel to the screw axis, the following rules should be applied.

$$n_{ef} = \max \begin{cases} n^{0,9} & \text{in general without torque controlled insertion drivers} \\ 0,9 \cdot n & \text{for screws } 30° \leq \varepsilon \leq 90° \text{ and torque controlled insertion drivers} \\ 0,9 \cdot n & \text{for a group with more than 10 screws in a timber-to-timber connection} \\ & \text{(e.g. ST, PL, CL, LVL, PLY, OSB)} \\ n & \text{for a group up to 10 screws in a timber-to-timber connection} \\ & \text{(e.g. ST, PL, CL, LVL, PLY, OSB)} \end{cases} \quad (30)$$

Where

n Number of screws acting together in a joint [-]

ε Angle between screw axis and grain-direction [°]

fischer PowerFast II screws for the structural use in timber constructions

1.3 Head pull-through capacity $F_{head,Rk}$

1.3.1 Head pull-through capacity $f_{head,k}$ for use in Solid Timber (ST-c, FST, GST, BGLT) Glued Laminated Timber (GLT-c), Cross Laminated Timber (CLT) and Wood-based panels (WFB, WPB)

The characteristic head pull-through capacity of »fischer PowerFast II« screws in Solid Timber can be calculate as following.

$$F_{head,Rk} = n_{ef} \cdot f_{head,k} \cdot d_h^{\,2} \cdot \left(\frac{\rho_k}{350}\right)^{0,8} \tag{31}$$

Where

d_h Diameter of the screw head [mm]

n_{ef} Effective number of screws according to Annex D7 and D14

ρ_k Characteristic density of the timber element [kg/m³]

$f_{head,k}$ Characteristic head pull-through parameter for »fischer PowerFast II« given below [N/mm²]

For timber elements with a thickness of at least 20 mm, the characteristic value of the head pull-through parameter $f_{head,k}$ can be taken into account as following.

Table D16.1: Characteristic values of the head pull-through parameter for ST-c/d, GST, FST, GLT-c/d, BGLT

Outer thread diameter *d*			**3,0**	**3,5**	**4,0**	**4,5**	**5,0**	**6,0**	**8,0**	**10,0**	**12,0**
Head type	**Material (Annex B)**	**Parameter**	**Head pull-through parameter [N/mm²]**								
Countersunk, Raised countersunk and Pan head (Annex A1, A2, A3, A7)	*ST-c, ST-d, FST, GST, GLT-c, GLT-d, BGLT, SWP-P*	$f_{head,k}$	19,0	16,3	15,0	14,2	13,4	13,0	12,5	12,0	11,6
Washer head and Screw with clamping effect (Annex A4, A5, A8)			-	-	-	-	20,0	15,5	14,3	12,6	11,2
Step countersunk (Annex A6, A9)			-	-	-	-	19,5	15,0	13,5	11,5	-
Hexagon head (Annex A10, A11)			-	-	-	-	-	-	10,0	10,0	10,0

For steel-to-timber connections the head pull-through capacity may be disregarded.

Notes: An accurate fit is important to avoid any kind of notch stresses see also Annex B4
The tear-off capacity of the screw head is greater than the tensile capacity of the screw

For the wood-based panels with a thickness of more than 20 mm the characteristic value of the head pull-through parameter can be calculated with

$$f_{head,k} = 10 \text{ N/mm}^2 \tag{32}$$

For wood-based panels with a thickness between 12 mm and 20 mm the characteristic value of the head pull-through parameter can be calculated with

$$f_{head,k} = 8 \text{ N/mm}^2 \tag{33}$$

fischer PowerFast II screws for the structural use in timber constructions

For wood-based panels with a thickness of less than 12 mm the characteristic head pull-through capacity can be calculated with $f_{head,k}$= 8 N/mm² with a limit of 400 N complying with a minimum thickness of the wood based panels of 1,2·*d*. In addition, the minimum thickness of Table D17.1 applies.

Table D17.1: Minimum thickness of Wood-Based Panels be fixed on the side of the screw head

Wood-based panel	Min. thickness [mm]
Plywood	6
Oriented strand board	8
Solid wood panels	12
Particleboards	8
Cement bonded particle boards	8
Fibreboards (hard boards and medium boards)	6
Gypsum fibre and Plasterboards	12

The characteristic head pull-through capacity in softwood of the FAFS–Clip of adjustable frame screw can be calculated for tension and/or compression (push-through capacity) loads of the screws with the characteristic values given in Table D17.2.

Table D17.2: Characteristic values of the head pull-through capacities of Screws with Clamping effect and FAFS-Clip (see Annex A4 and A12)

Outer thread diameter *d* [mm]			3,5	4,0	4,5	5,0
Head type	**Product Abbreviation**	**Parameter**	**Headside pull-through capacity [N]**			
Screw with clamping effect	*ST-c, FST-c, GST-c, GLT-c, BGLT-c, SWP-P*	$F_{headside,Rk}$	1220	1485	1750	-
FAFS-Clip		$F_{FAFS,t,Rk}$ (tension)	-	-	-	2200
		$F_{FAFS,c,Rk}$ (compression)	-	-	-	1290

fischer PowerFast II screws for the structural use in timber constructions

1.4 Compression capacity in Solid Timber (ST, FST, GST) and Glued Laminated Timber (GLT-c, BGLT) and Laminated Veneer Lumber (LVL-c)

The design compressive capacity $F_{ax,Rd}$ of »fischer PowerFast II« screws with the thread completely embedded in timber and a free screw length protruding from the timber member, including the screw head, and additional head supporting thick metal plates according to Annex L, shall be calculated as following.

$$F_{ax,\alpha,Rd} = \min \begin{cases} F_{ax,\alpha,Rd} \\ F_{b,Rd} \end{cases} \tag{34}$$

Where

$F_{ax,\alpha,Rd}$ Withdrawal capacity see Annex D9 to D15 [N]

$F_{b,Rd}$ Buckling strength [N]

$$F_{b,Rd} = 1{,}10 \cdot \kappa_c \cdot N_{pl,Rd} \tag{35}$$

With

$$\begin{aligned} \kappa_c &= 1 && \text{for } \bar{\lambda} \le 0{,}2 \\ \kappa_c &= \frac{1}{k + \sqrt{k^2 - \bar{\lambda}^2}} && \text{for } \bar{\lambda} > 0{,}2 \end{aligned} \tag{36}$$

and

$$k = 0{,}5 \cdot \left[1 + 0{,}49 \cdot \left(\bar{\lambda} - 0{,}2 \right) + \bar{\lambda}^2 \right] \tag{37}$$

The relative slenderness ratio shall be calculated with

$$\bar{\lambda} = \sqrt{\frac{N_{pl,k}}{N_{b,k}}} \tag{38}$$

With the characteristic value for the axial capacity in case of plastic analysis

$$N_{pl,k} = \frac{d_s^{\,2} \cdot \pi}{4} \cdot f_{y,k} \tag{39}$$

With

d_s Outer shank diameter of the screw [mm]

$f_{y,k}$ Yield strength, see Annex C1, Table C1.1 [N/mm²]

$N_{pl,k}$ Characteristic value of the plastic axial capacity [N]

fischer PowerFast II screws for the structural use in timber constructions

With the characteristic value for buckling strength

$$N_{b,k} = \frac{\pi^2 \cdot E_s I_s}{l_{ef}^{\ 2}} \tag{40}$$

With the

Modulus of elasticity

$$E_s = 210.000 \text{ N/mm}^2 \tag{41}$$

and the second moment of area

$$I_s = \frac{\pi \cdot d_s^{\ 4}}{64} \tag{42}$$

Where

d_s	Outer shank diameter d_s [mm]
l_{ef}	Buckling length [mm] *with* l_{ef}=0,7□l
l	Free screw length protruding of the timber member including the screw head [mm]

Note: The compressive capacity must be modified for $F_{ax,\alpha,Rd}$ with the factors k_{mod} and γ_M for timber connections according to EN 1995-1-1, while $N_{pl,Rd}$ the partial-factor $\gamma_{M,1}$ for steel buckling according to EN 1993-1-1 and/or national standards respectively have to be considered.
For γ_M, $\gamma_{M,1}$ the values γ_M =1,3 and $\gamma_{M,1}$ =1,1 are recommended.

Screws loaded in compression with additional head supporting thick metal plates where distortion and displacement of the screw head perpendicular to the buckling loads are not possible, should be considered in accordance to Table L1.1 (see Annex L1).

fischer PowerFast II screws for the structural use in timber constructions

1.5 Combined laterally and axially loaded screws

For connections subjected to a combination of axial and lateral loads, the following equation has to be considered.

$$\left(\frac{F_{ax,Ed}}{F_{ax,Rd}}\right)^2 + \left(\frac{F_{v,Ed}}{F_{v,Rd}}\right)^2 \leq 1 \qquad (43)$$

Where

$F_{ax,Ed}$	Axial design action [N]
$F_{v,Ed}$	Lateral design action [N]
$F_{ax,Rd}$	Design load-carrying capacity of axially loaded screws [N]
$F_{v,Rd}$	Design load-carrying capacity of laterally loaded screws [N]

fischer PowerFast II screws for the structural use in timber constructions

1.6 Slip modulus in the Serviceability Limit State

1.6.1 Laterally loaded screws

For laterally loaded »fischer PowerFast II« screws, the slip modulus, predrilled or non-predrilled, for the serviceability limit state (SLS) should be calculated according to EN 1995-1-1 independent of the load grain-direction angle α with equation (44).

$$K_{v,ser} = k_{st} \cdot k_{sp} \cdot C_{v,ser} \tag{44}$$

With

k_{st} $\quad k_{st} = \begin{cases} 1 & \text{for timber-timber connections} \\ 2 & \text{for steel-timber connections} \end{cases}$

k_{sp} Number of shear planes

$C_{v,ser}$ Slip modulus in the Serviceability limit state (SLS) each shear plane, Table D21.1 [N/mm]

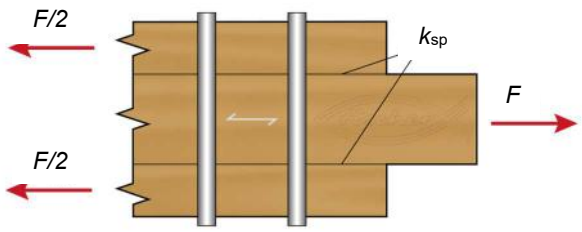

Figure D17.1: Definition of the shear plane k_{sp} (figure not to scale)

1.6.2 Axially loaded screws

For axially loaded screws the slip modulus for the serviceability limit state (SLS) can be calculated according to equation (45).

$$K_{ax,ser} = C_{ax,ser} \tag{45}$$

With

d Outer thread diameter [mm]

l_{ef} Penetration length of the threaded part , including the tip in [mm]

$C_{ax,ser}$ Slip modulus in the serviceability limit state (SLS), Table D21.1 [N/mm]

fischer PowerFast II screws for the structural use in timber constructions

1.7 Slip modulus in the ultimate limit state

To consider the slip modulus K_u in the ultimate limit state (ULS) K_{ser} has to be reduced for both directions (laterally and axially) according to EN 1995-1-1 with

$$K_u = 2/3 \cdot K_{ser} \tag{46}$$

1.7.1 Laterally loaded screws

For laterally loaded »fischer PowerFast II« screws, the slip modulus, predrilled or non-predrilled, for the ultimate limit state (ULS) should be calculated according to EN 1995-1-1 independent of the load grain-direction angle α with equation (46).

Table D22.1: Mean values of the lateral slip-modules in Serviceability Limit State (SLS) in the plane surface of timber elements and wood based panels

Outer thread diameter *d* [mm]	**3,0 – 12,0 mm**
Material	**Lateral Slip-Modulus $C_{v,ser}$ [N/mm]**
Solid Timber Glued-Laminated Timber Softwood and Hardwood (EN 338, EN 15497, EN 14080)	$\frac{\rho_m^{1,5} \cdot d}{23}$
OSB t > 5 mm (EN 300)	$6{,}8 \cdot \rho_m \cdot d^{-0,4}$
Plywood t > 4 mm (EN 314-2)	*740*
Fibreboards t > 3 mm (EN 622-2, EN 622-3)	$9 \cdot \rho_m \cdot d^{-0,9}$
Particleboards t > 5 mm (EN 312)	$3 \cdot \rho_m \cdot d^{-0,4}$
Gypsum plasterboards t ≥ 9 mm (EN 520)	$6700 \cdot d^{-087}$
Gypsum boards with fibrous reinforcement t ≥ 9 mm (EN 15283-2)	$1{,}4 \cdot \rho_m \cdot d^{-0,7}$
LVL Soft- and Hardwood (EN 14374)	$\frac{\rho_m^{1,5} \cdot d}{20}$

fischer PowerFast II screws for the structural use in timber constructions

1.7.2 Axially loaded screws

For axially loaded »fischer PowerFast II« screws, the slip modulus, predrilled or non-predrilled, for the ultimate limit state (ULS) should be calculated according to EN 1995-1-1 independent of the load grain-direction angle α with equation (46).

Table D23.1: Mean values of the axial slip-modules in Serviceability Limit State (SLS) in the plane surface of timber elements and wood based panels

Outer thread diameter *d* [mm]	**3,0 – 12,0 mm**
Material	**Axial Slip-Modulus $C_{ax,ser}$ [N/mm]**
Softwood $\rho_k \geq 350$ kg/m³	$32 \cdot d \cdot l_{ef}$
Hardwood $\rho_k \geq 510$ kg/m³	$38 \cdot d \cdot l_{ef}$
OSB t > 5 mm (EN 300)	$10 \cdot d \cdot l_{ef}$
Fibreboards t > 3 mm (EN 622-2, EN 622-3)	$15 \cdot d \cdot l_{ef}$
Particleboards t > 5 mm (EN 312)	$10 \cdot d \cdot l_{ef}$
LVL (EN 14374) Soft- and Hardwood $\rho_k \geq 480$ kg/m³ α=90|90, see D9.1	$28 \cdot d \cdot l_{ef}$

Applications of PowerFast II screws for the structural use in timber constructions

Fixations of on-roof insulation systems for sufficiently compression resistant insulations

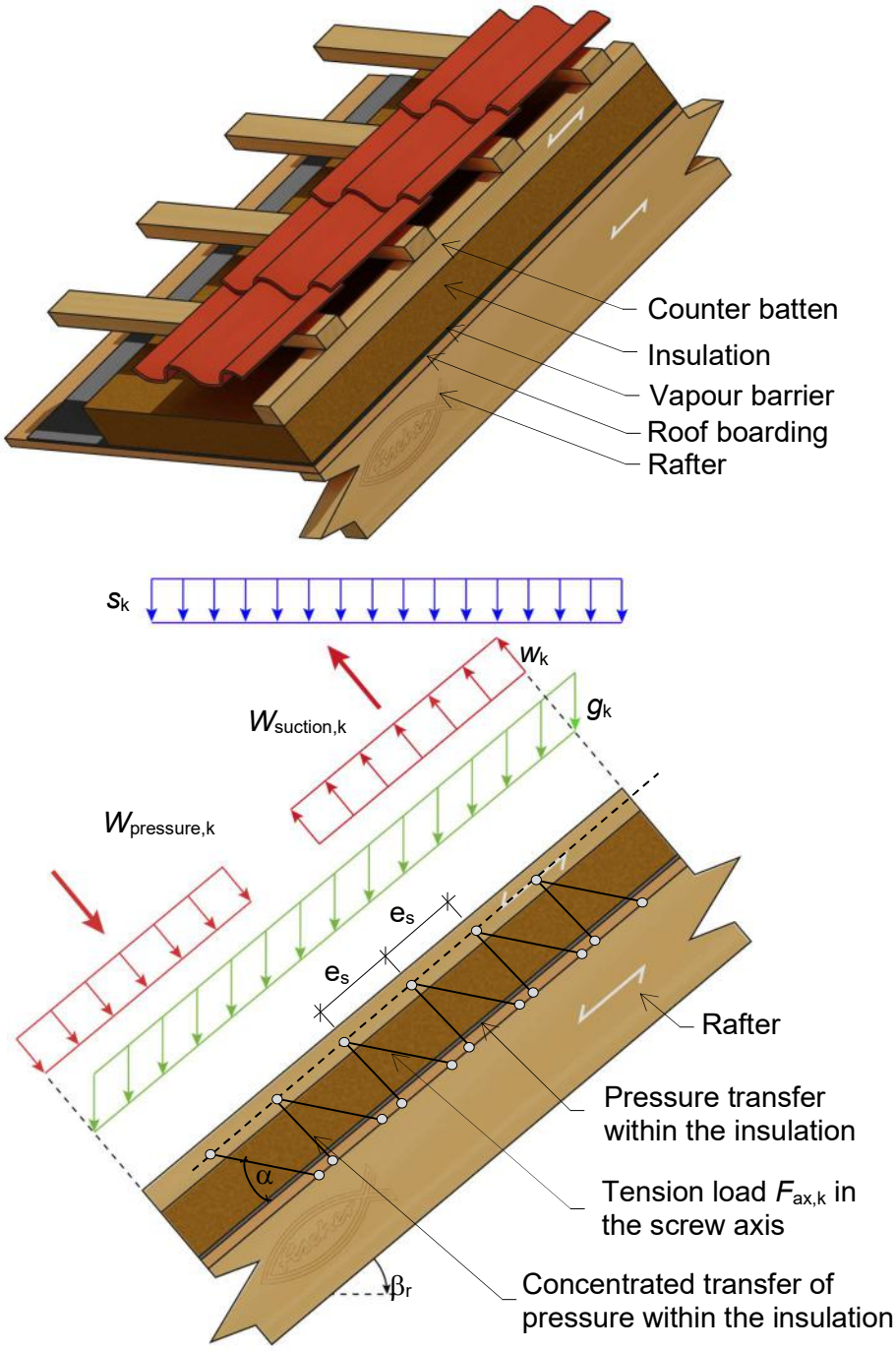

Figure E1.1: Counter batten on rafters with insulation (figures not to scale)

Where

β_r	Roof inclination	α	Angle between the screw axis and the grain-direction of the rafter
e_s	Spacing of screws	l_{ef}	Point side penetration length of the threaded part in the rafter

fischer PowerFast II screws for the structural use in timber constructions

Point loads F_{Ed} perpendicular to the battens for sufficiently compression resistant insulations

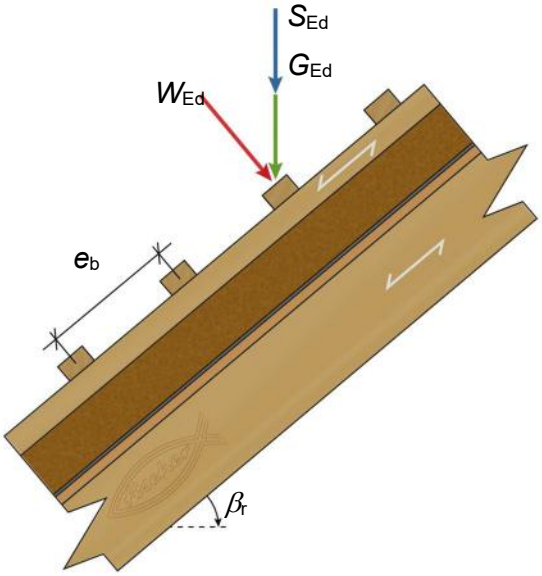

$$
\begin{aligned}
G_{Ed} &= \gamma_G \cdot g_k \cdot e_b \cdot e_r \\
S_{Ed} &= \gamma_Q \cdot s_k' \cdot e_b \cdot e_r \cdot \cos\beta_r \\
W_{Ed} &= \gamma_Q \cdot w_{pressure,k} \cdot e_b \cdot e_r \\
F_{Ed} &= W_{Ed} + (G_{Ed} + S_{Ed}) \cdot \cos\beta_r
\end{aligned}
\qquad (47)
$$

Figure E2.1: Counter batten on rafters with insulation – Calculation model action loads (figure not to scale)

Where

F_{Ed}	Point load perpendicular to the battens [N]
G_{Ed}	Point load by dead weight [N]
S_{Ed}	Point load by snow load [N]
W_{Ed}	Point load by wind pressure [N]
e_b	Distance of the battens [mm]
e_r	Distance of the rafters [mm]
g_k	Characteristic dead load per m² roof area [N/m²]
s_k'	Characteristic snow load per m² roof area [N/m²]
$w_{pressure,k}$	Characteristic wind pressure per m² roof area [N/m²]
β_r	Roof inclination [°]
γ_G	Partial factor for permanent action acc. to EN 1990
γ_Q	Partial factor for variable action acc. to EN 1990

Note: For the calculation design values must be used

Design of PowerFast II screws for the structural use in timber constructions

Point loads F_{Ed} perpendicular to the battens by the screws

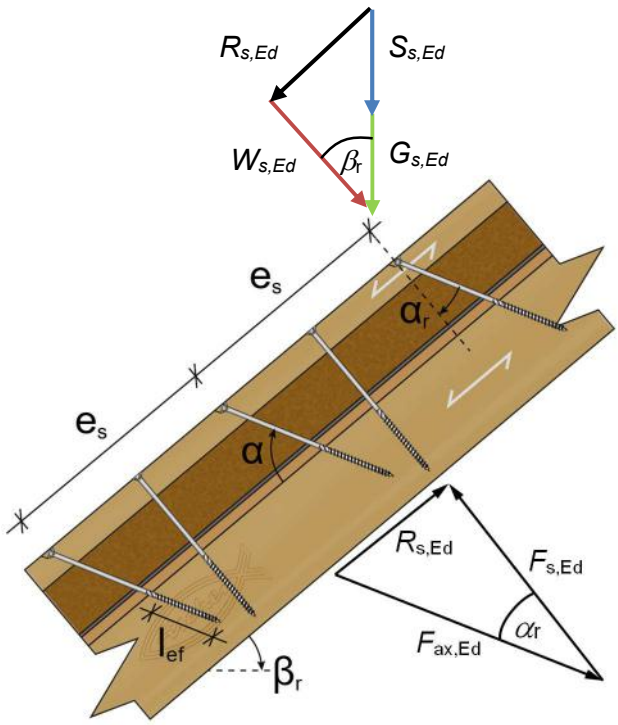

Figure E3.1: Counter batten on rafters with insulation – Design loads (figure not to scale)

$$
\begin{aligned}
G_{s,Ed} &= \gamma_G \cdot g_k \cdot e_s \cdot e_r \\
S_{s,Ed} &= \gamma_Q \cdot s_k' \cdot e_s \cdot e_r \cdot \cos\beta_r \\
R_{s,Ed} &= \left(G_{s,Ed} + S_{s,Ed}\right) \cdot \sin\beta_r \\
F_{s,Ed} &= R_{s,Ed} \big/ \tan\alpha_r
\end{aligned}
\qquad (48)
$$

Where

$F_{ax,Ed}$	Axial load of the screws [N]
$F_{s,Ed}$	Point loads perpendicular to the battens by screws [N]
$G_{s,Ed}$	Point load by dead weight [N]
$R_{s,Ed}$	Shear load due to dead weight and snow load [N]
$S_{s,Ed}$	Point load by snow load [N]
$W_{S,Ed}$	Point load by wind pressure [N]
e_s	Distance of the screws [mm]
e_r	Distance of the rafters [mm]
g_k	Characteristic dead load on the roof [N/m²]
s_k'	Characteristic snow load on the roof [N/m²]
α_r	Inclination of the screw axis (see Figure L3.1) [°]
β_r	Roof inclination [°]
γ_G	Partial factor for permanent action acc. to EN 1990 [-]
γ_Q	Partial factor for variable action acc. to EN 1990 [-]

Note: For the calculation design values must be used

Design of PowerFast II screws for the structural use in timber constructions

The bending stresses of the battens are calculated with

$$M_{Ed} = \frac{\left(F_{Ed} + F_{s,Ed}\right) \cdot l_{char}}{4} \tag{49}$$

Where

F_{Ed} Point loads perpendicular to the battens [N]
$F_{s,Ed}$ Point loads perpendicular to the battens in the area of the screw heads [N]
M_{Ed} Design bending moment of the batten [Nmm]
l_{char} Characteristic length of the batten [mm]

with $l_{char} = \sqrt[4]{\frac{4 \cdot EI}{w_{ef} \cdot K}}$, where

EI Bending stiffness of the batten [Nmm²]
w_{ef} Effective width of the thermal insulation [mm]
with $w_{ef} = w + t_{ti} / 2$, where
w Minimum width of the batten or rafter [mm]
t_{ti} Thickness of the thermal insulation [mm]
K Bedding modulus [N/mm³]
The coefficient K may be calculated from the modulus of elasticity E_{ti} and the thickness t_{ti} of the thermal insulation if the effective width w_{ef} of the thermal insulation under compression is known. Due to the load extension in the insulation the effective width w_{ef} is greater than the width of the batten or rafter, respectively. For further calculations, the effective width w_{ef} of the thermal insulation may be determined with $K = \frac{E_{ti}}{t_{ti}}$, where
E_{ti} Modulus of elasticity of the thermal insulation [N/mm²]
t_{ti} Thickness of the thermal insulation [mm]

The following conditions shall be satisfied:

$$\frac{\sigma_{m,Ed}}{f_{m,d}} \leq 1 \tag{50}$$

Where

$\sigma_{m,Ed}$ Design value of the bending stress of the batten [N/mm²]
$f_{m,d}$ Design value of the bending strength [N/mm²]

$$\frac{\tau_{Ed}}{f_{v,d}} = \frac{3 \cdot V_{Ed}}{2 \cdot A_{ef} \cdot f_{v,d}} \leq 1 \tag{51}$$

Where
$f_{v,d}$ Design value of the shear strength of the batten [N/mm²]
A_{ef} Net cross section of the batten [mm²]
V_{Ed} Design shear load onto the batten [N]

with $V_{Ed} = \frac{F_{Ed} + F_{s,Ed}}{2}$

τ_{Ed} Design value of the shear stress of the batten [N/mm²]

Design of PowerFast II screws for the structural use in timber constructions

If the compressive stresses are transferred over the thermal insulation and not the screws, the following equation has to be considered.

$$\sigma_{c,Ed} = \frac{1{,}5 \cdot F_{Ed} + F_{s,Ed}}{2 \cdot l_{char} \cdot w_{ef}} \tag{52}$$

Where

$\sigma_{c,Ed}$ Design value of the compression stresses of the thermal insulation
F_{Ed} Point loads perpendicular to the battens [N]
$F_{s,Ed}$ Point loads perpendicular to the battens in the area of the screw heads [N]
l_{char} Characteristic length of the batten [mm]

with $l_{char} = \sqrt[4]{\frac{4 \cdot EI}{w_{ef} \cdot K}}$, where

EI Bending stiffness of the batten [Nmm²]
w_{ef} Effective width of the thermal insulation [mm]

with $w_{ef} = w + t_{ti} / 2$,

Where
w Minimum width of the batten or rafter [mm]
t_{ti} Thickness of the thermal insulation [mm]

K Bedding modulus [N/mm³]
The coefficient K may be calculated from the modulus of elasticity E_{ti} and the thickness t_{ti} of the thermal insulation if the effective width w_{ef} of the thermal insulation under compression is known. Due to the load extension in the insulation the effective width w_{ef} is greater than the width of the batten or rafter, respectively. For further calculations, the effective width w_{ef} of the thermal insulation may be determined with $K = \frac{E_{ti}}{t_{ti}}$, where

E_{ti} Modulus of elasticity of the thermal insulation [N/mm²]
t_{ti} Thickness of the thermal insulation [mm]

Note: The design value of the compressive stress shall not be greater than 110 % of the compressive stress at 10 % deformation calculated according to EN 826.

Design of PowerFast II screws for the structural use in timber constructions

The screws are loaded predominantly axially. The axial tension force in the screw may be calculated from the shear loads of the roof

$$F_{ax,Ed} = \frac{R_{s,Ed}}{\cos\alpha_r} \leq F_{ax,\alpha,Rd} \tag{53}$$

Where

$F_{ax,Ed}$	Design value of the axial tension forces onto the screw [N]
$F_{ax,\alpha,Rd}$	Design value of the withdrawal capacity of the screw [N]
$R_{s,Ed}$	Shear loads onto the screw [N]
α_r	Angle inclined screw (see Figure L3.1) [°]

In order to limit the deformation of the screw head for heat insulation thicknesses over 200 mm or with compressive strength below 0,12 N/mm², respectively, the axial withdrawal capacity of the screws shall be reduced by the factors k_1 and k_2.

The design axial capacity of fischer PowerFast II screws for rafter or façade installation should be calculated with equation (54). The load-carrying capacity of axially loaded screws is the minimum design value of the axial withdrawal capacity of the threaded part of the screw, the head pull-through capacity of the screw and the tensile capacity of the screw.

$$F_{ax,\alpha,Rd} = \min\left\{ k_{ax} \cdot f_{ax,d} \cdot d \cdot l_{ef,r} \cdot k_1 \cdot k_2 \cdot \left(\frac{\rho_{k,r}}{350}\right)^{0,8} ;\ \max\left\{ \begin{matrix} f_{head,d} \cdot d_h^{\,2} \\ k_{ax} \cdot f_{ax,d} \cdot d \cdot l_{ef,b} \end{matrix} \right\} \cdot \left(\frac{\rho_{k,b}}{350}\right)^{0,8} ;\ f_{tens,d} \right\} \tag{54}$$

Where

$F_{ax,\alpha,Rd}$	Design value of the withdrawal capacity of the screw [N]
d	Diameter of the screw [mm]
d_h	Head diameter of the screw [mm]
$f_{ax,d}$	Design value of the withdrawal parameter of the threaded part of the screw [N/mm²]
$f_{head,d}$	Design value of the head pull-through capacity of the screw [N/mm²]
$f_{tens,d}$	Design value of the tensile capacity of the screw [N]
k_{ax}	Coefficient according to equation (21)
k_1	min {1; 200 / t_{ti}} [-]
k_2	min {1; $\sigma_{10\%,Ed}$ / 0,12} [-], where
	$\sigma_{10\%,Ed}$ Compressive stress of the heat insulation at 10 % deformation [N/mm²]
	t_{ti} Thickness of the thermal insulation [mm]
$l_{ef,r}$	Point side penetration length of the threaded part in the rafter with $l_{ef} \geq 40$ mm
$l_{ef,b}$	Penetration length of the threaded part in the batten
α	Angle between grain and screw axis ($\alpha \geq 30°$) [°]
ρ_k	Characteristic density of the timber element [kg/m³]

Note: If the factors k_1 and k_2 are considered in the equation for $F_{ax,Rd}$, the deflection of the battens is not be taken into account. Alternatively to the battens, panels with a minimum thickness of 20 mm from plywood according to EN 636, national provisions or with an ETA that apply at the installation site, particle board according to EN 312, national provisions or with an ETA that apply at the installation site, oriented strand board according to EN 300, national provisions or with an ETA that apply at the installation site and solid wood panels according to EN 13353, national provisions or with an ETA that apply at the installation site or Cross- laminated Timber according to an ETA may be used.

Design of PowerFast II screws for the structural use in timber constructions

Thermal insulation material on rafters with parallel screws perpendicular to the roof plane

Alternative to the battens, panels with a minimum thickness of 20 mm from plywood according to EN 636, particleboard according to EN 312, oriented strand board OSB/3 and OSB/4 according to EN 300 or European Technical Assessment and solid wood panels according to EN 13353 may be used.
The insulation must have a minimum compressive strength of $\sigma_{10\%}$=0,05 N/mm² at 10 % deformation according to EN 826.
The battens or wood-based panels, respectively, must have sufficient strength and stiffness. The maximum design value of the compressive stress between the battens or boards, respectively, and the insulation shall not exceed 1,1 $\sigma_{10\%}$.

Characteristic load-carrying capacity of a screw loaded in shear may be calculated with

$$F_{v,Rk} = \min \begin{cases} f_{h,b,k} \cdot d \cdot t_b \\ f_{h,r,k} \cdot d \cdot t_r \\ \dfrac{f_{h,b,k} \cdot d \cdot \beta}{1+\beta} \cdot \left(\sqrt{4t_{ti}^2 + (2+\frac{1}{\beta})t_b^2 + (2+\beta)t_r^2 + 4t_{ti}\left(t_b + t_r\right) + 2t_b t_r} - 2t_{ti} - t_b - t_r \right) + \dfrac{F_{ax,Rk}}{4} \\ 1{,}05 \cdot \dfrac{f_{h,b,k} \cdot d \cdot \beta}{\frac{1}{2}+\beta} \left(\sqrt{t_{ti}^2 + t_{ti}t_b + \dfrac{t_b^2}{2}\left(1+\dfrac{1}{\beta}\right) + \dfrac{M_{y,k}}{f_{h,b,k} \cdot d}\left(1+\dfrac{2}{\beta}\right)} - t_{ti} - \dfrac{t_b}{2} \right) + \dfrac{F_{ax,Rk}}{4} \\ 1{,}05 \cdot \dfrac{f_{h,b,k} \cdot d \cdot \beta}{\frac{1}{2}+\beta} \left(\sqrt{t_{ti}^2 + t_{ti}t_r + \dfrac{t_r^2}{2}\left(1+\beta\right) + \dfrac{M_{y,k}}{f_{h,b,k} \cdot d}\left(2+\dfrac{1}{\beta}\right)} - t_{ti} - \dfrac{t_r}{2} \right) + \dfrac{F_{ax,Rk}}{4} \\ 1{,}15 \cdot \dfrac{f_{h,b,k} \cdot d}{1+\beta} \left(\sqrt{\beta^2 t_{ti}^2 + 4 \cdot \beta\left(\beta+1\right) \cdot \dfrac{M_{y,k}}{f_{h,b,k} \cdot d}} - \beta \cdot t_{ti} \right) + \dfrac{F_{ax,Rk}}{4} \end{cases} \quad (55)$$

Where

$F_{v,RK}$	Characteristic load-carrying capacity of a screw loaded in shear [N]
$M_{y,k}$	Characteristic yield moment of the screw [Nmm]
$F_{ax,Rk}$	The minimum characteristic load-carrying capacity of the axially loaded screws acc. to Annex D [N]
$f_{h,b,k}$	Characteristic embedment strength of the batten [N/mm²]
$f_{h,r,k}$	Characteristic embedment strength of the rafter [N/mm²]
d	Outer thread diameter [mm]
t_b	Batten thickness [mm]
t_r	The lower value of rafter thickness or screw penetration length [mm]
t_{ti}	Thickness of the thermal insulation [mm]
β	Coefficient of the embedment strength of the rafter to the batten [-] with $\beta = f_{h,r,k} / f_{h,b,k}$

Applications of PowerFast II screws for the structural use in timber constructions

FAFS-Clip of adjustable frame screw: Installations of ceilings or technical shells

The FAFS-Clip has to be used in combination with fischer PowerFast II – Chipboard screws with *d*=5 mm and countersunk head geometry (see Annex A1). It should be considered that the screw-in direction referred to the load direction (see Figure F1.1) is 0 ± 5°. Horizontal loads which also effects bending moments of the screws should be avoided or otherwise transferred with additional slanted screws.

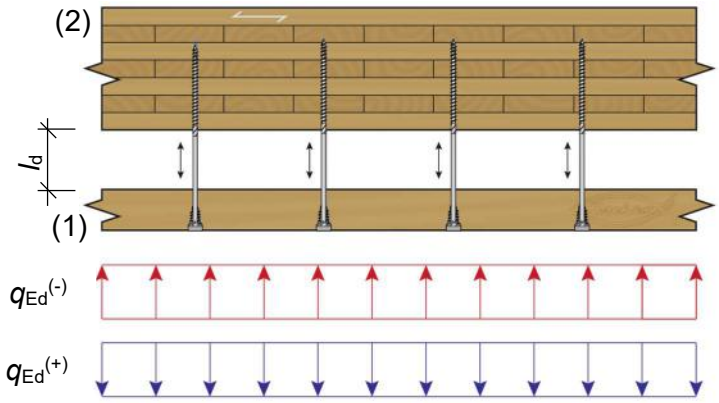

Figure F1.1: Installation of a ceiling or technical shell with the FAFS-Clip (figure not to scale)

The load-carrying capacity for acting loads $q_{Ed}^{(+)}$ can be calculated like following:

$$q_{Ed}^{(+)} \cdot e \leq \min \begin{cases} F_{ax,Rd} \\ F_{FAFS,t,Rd} \end{cases} \tag{56}$$

With

$F_{ax,Rd}$ According to Table D10.1 for screws in Annex A1 with *d* = 5,0 mm

$F_{FAFS,t,Rd}$ According to Table D16.2 for FAFS-Clip in Annex A12

The load carrying capacity for acting loads $q_{Ed}^{(-)}$ should be calculated like shown below

$$q_{Ed}^{(-)} \cdot e \leq \min \begin{cases} F_{ax,Rd} \\ F_{ki,Rd} \\ F_{FAFS,c,Rd} \end{cases} \tag{57}$$

With

$F_{ax,Rd}$ According to Table D10.1 for screws in Annex A1 with *d = 5,0* mm

$F_{FAFS,c,Rd}$ According to Table D16.2 for FAFS-Clip in Annex A12

and

$$F_{ki,Rd} = \kappa_c \cdot N_{pl,d} \tag{58}$$

where

$$\kappa_c = 1 \qquad \text{for } \bar{\lambda} \leq 0,2$$
$$\kappa_c = \frac{1}{k + \sqrt{k^2 - \bar{\lambda}^2}} \qquad \text{for } \bar{\lambda} > 0,2 \tag{59}$$

Applications of PowerFast II screws for the structural use in timber constructions

FAFS-Clip of adjustable frame screw: Installations of ceilings or technical shells

with

$$k = 0{,}5 \cdot \left[1 + 0{,}49 \cdot \left(\overline{\lambda} - 0{,}2 \right) + \overline{\lambda}^2 \right] \tag{60}$$

The relative slenderness ratio shall be calculated with

$$\overline{\lambda} = \frac{4 \cdot L_{cr}}{\pi \cdot (0{,}7 \cdot d)} \cdot \sqrt{\frac{f_{y,k}}{E_s}} \tag{61}$$

With the characteristic value for the axial capacity in case of plastic analysis referred to the diameter

$$N_{pl,k} = \frac{(0{,}7 \cdot d)^2 \cdot \pi}{4} \cdot f_{y,k} \tag{62}$$

For screws with a diameter of 5 mm, according to Annex A1

$$N_{pl,k} = 8710 \text{ N} \tag{63}$$

And the buckling length L_{cr} *on the side of the screw tip* with a minimum penetration depth of *8·d*

$$L_{cr} = 0{,}7 \cdot l_d \tag{64}$$

Where

d	Nominal diameter of the screw [mm]
e	Effective distance (supporting points) between parallel arranged screws [m]
E_s	Modulus of elasticity of the screw [N/mm²], see Annex C
$F_{ax,Rd}$	Design withdrawal capacity of the screw in the structural timber element (2) [N], see Annex D10.1
$F_{FAFS,t,Rd}$	Design head pull-through capacity of the FAFS-Clip in timber part (1) for tension forces [N], see Annex D16
$F_{FAFS,c,Rd}$	Design head push-through capacity of the FAFS-Clip in timber part (1) for compression forces [N], see Annex D16
L_{cr}	Buckling length of the screw [mm]
l_d	Distance between (1) and (2) [mm]
$N_{pl,k}$	Characteristic axial capacity in case of plastic analysis [N]
$q_{Ed}^{(+)}$	Design load effecting tension loads on the installation element (1) [N/m]
$q_{Ed}^{(-)}$	Design load effecting compression loads on the installation element (1) [N/m]

Note: The compressive capacity must be modified for $f_{ax,d}$ with the factors k_{mod} and γ_M for timber according to EN 1995-1-1, while $N_{pl,d}$ the partial-factor $\gamma_{M,1}$ for steel buckling according to EN 1993-1-1 and/or national standards must be considered.

Applications of PowerFast II screws for the structural use in timber constructions

Examples of different Façade Systems

Type of »fischer PowerFast II« screws have to be selected based on the loads, base materials and geometric boundaries.

Example: PowerFast II used as substrate fixings

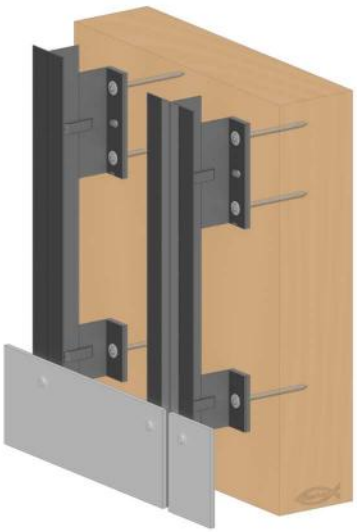

e.g. fischer BWM facade system
AKT 100

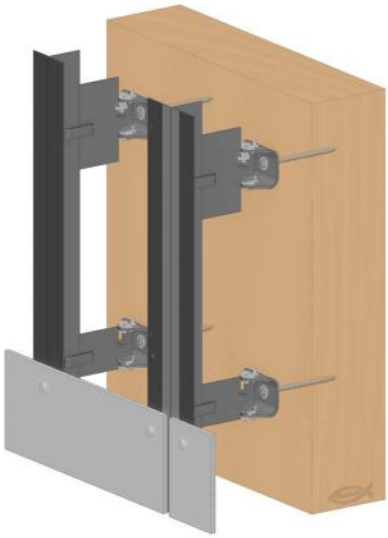

e.g. fischer BWM facade system
AKT 100 Zela

e.g. fischer BWM facade system
AKT 103

Example: PowerFast II used as subframe fixings

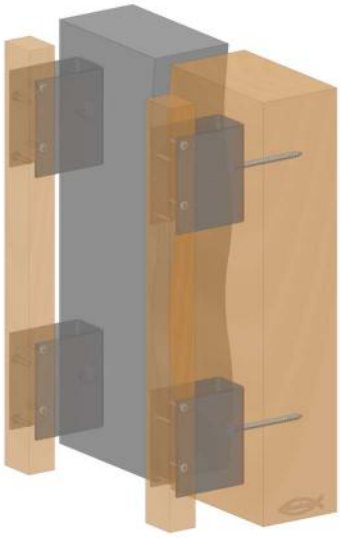

e.g. fischer BWM facade system
Wood holder type H1

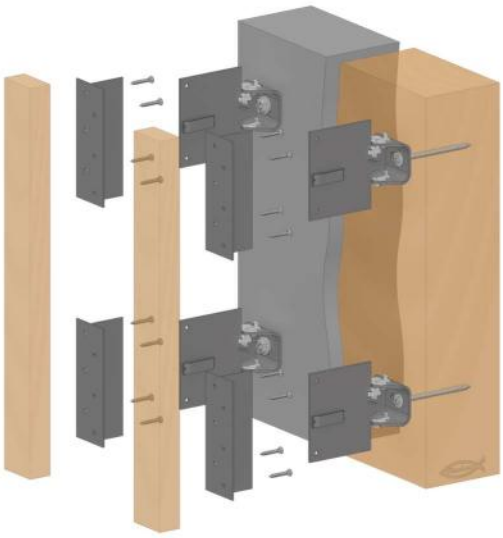

e.g. fischer BWM facade system
Wood holder type T2

Figure G1.1: Installation BWM Façade Systems (figures not to scale)

Applications of PowerFast II screws for the structural use in timber constructions

Examples of Installation Systems for different mounting channels

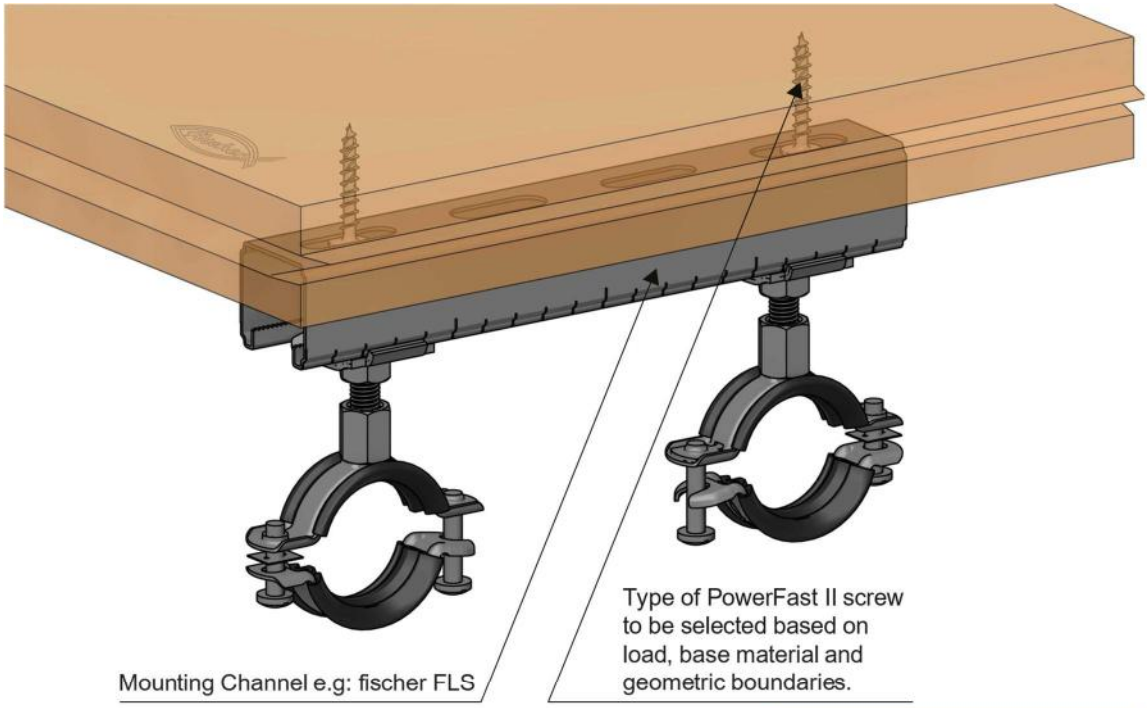

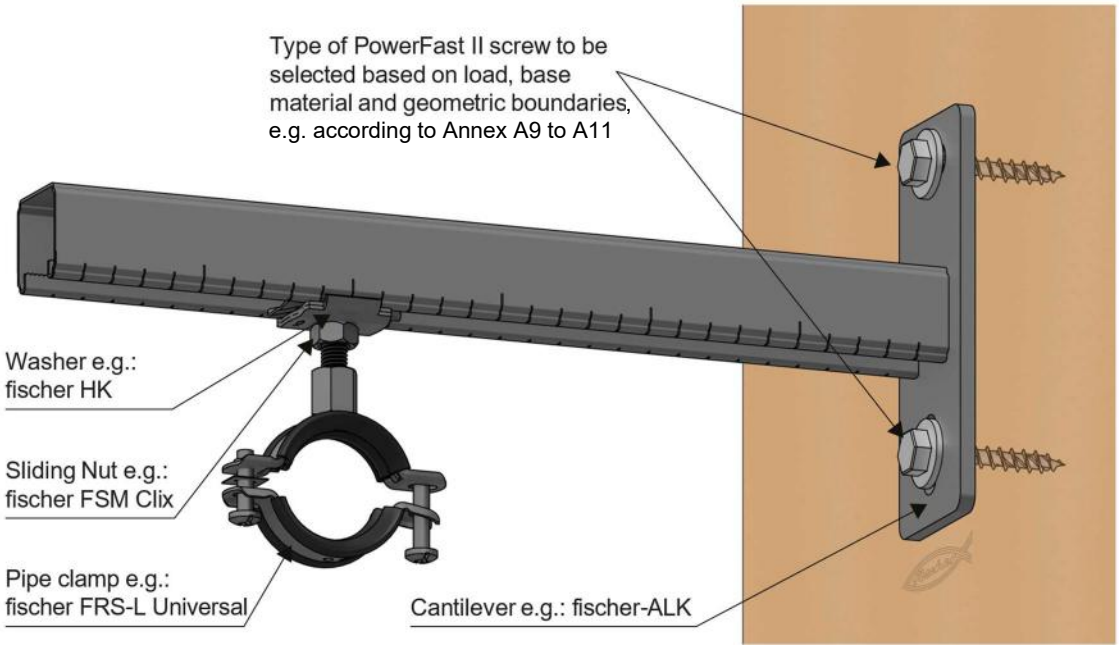

Figure G2.1: Applications of fischer PowerFast II screws with fischer FLS, ALK, HK FSM Clix and FRS-L (figures not to scale)

Applications of PowerFast II screws for the structural use in timber constructions

Examples of Installation Systems for different mounting channels

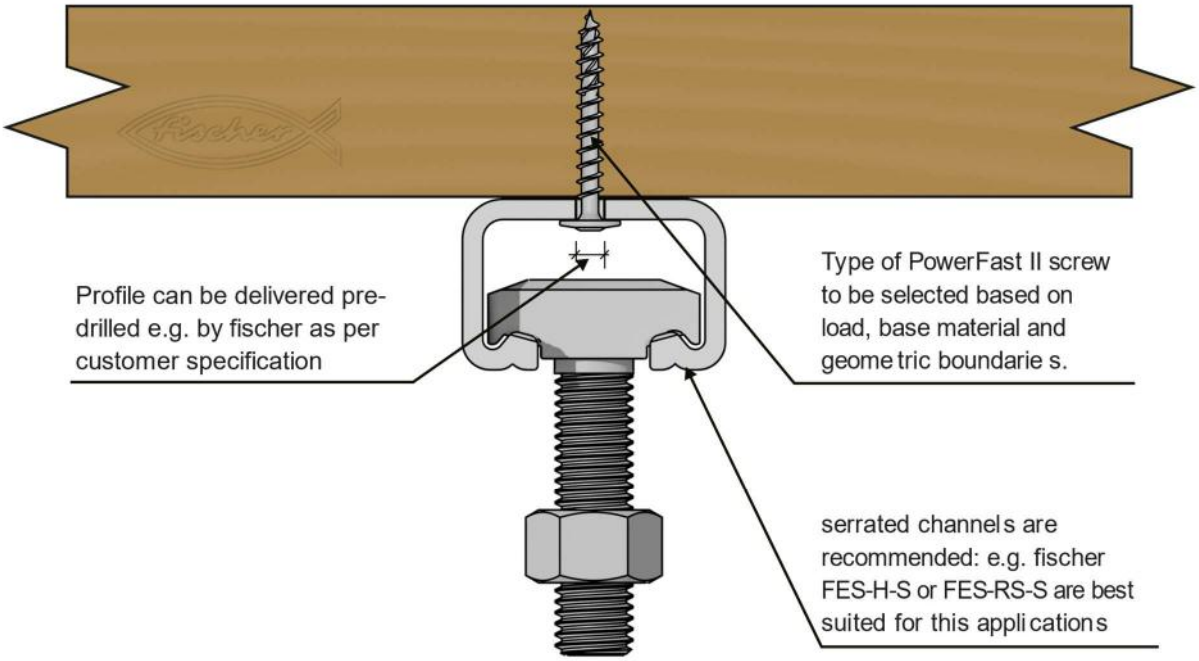

Figure G3.1: Applications of fischer PowerFast II screws with fischer FES-H or FES-RS-S (figure not to scale)

Design of PowerFast II screws for the structural use in timber constructions

Inclined screws with an angle of 45° for the use in single shear plane timber-to-steel connections

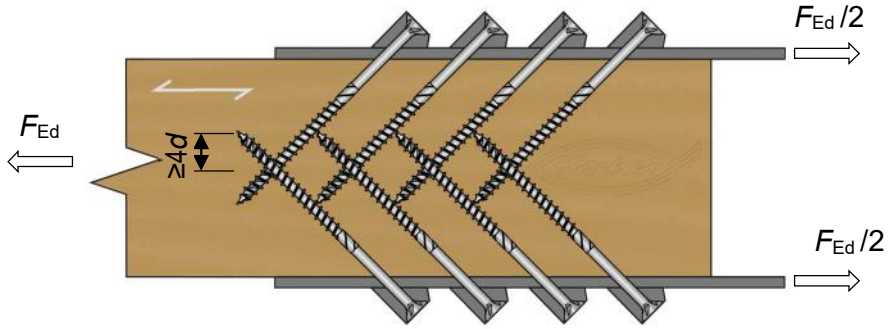

Figure H1.1: Shear connection with inclined screws steel-to-timber connection (figure not to scale)

$$F_{v,Rk} = F_{ax,\alpha,Rk} \cdot \left(\mu \cdot \sin\alpha + \cos\alpha\right) + \sqrt{2 \cdot (1+\zeta)} \cdot \sqrt{M_{y,Rk} \cdot f_{h,\alpha,k} \cdot (0,7 \cdot d) \cdot \sin^2\alpha} \cdot (1 - \mu \cdot \cot\alpha) \quad (65)$$

With

Where

$F_{v,Rk}$	Characteristic load-carrying capacity of a screw each shear plane [N]
$F_{ax,\alpha,Rk}$	Characteristic withdrawal capacity of the screw [N], see Annex D
α	Angle between screw axis and grain-direction [°], α = 45°
ζ	Factor to consider partial restraint of the screw head in the steel plate [0≤ ζ ≤1] ζ=0 For thin steel plates t < 1,5·d ζ=1 For thick steel plates t ≥ 1,5·d *and tolerances of the diameter less than* 0,1·d In between a linear interpolation is allowed
$M_{y,Rk}$	Yield moment of the screw see Annex C [Nmm],
$f_{h,\alpha',k}$	Characteristic embedment strength of the screw with an angle α' = 45 [°]
μ	Coefficient of friction, if permanent compression forces between the steel/aluminium and timber elements can be ensured For steel and aluminium μ = 0,25

Note: For the use of inclined screws from opposite sides, the screws must overlap in the area of the screw tips to avoid a damage due to tension stress perpendicular to the grain-direction (Recommended value ≥ 4·d)

Design of PowerFast II screws for the structural use in timber constructions

Inclined screws for the use in single shear plane timber-to-timber connections

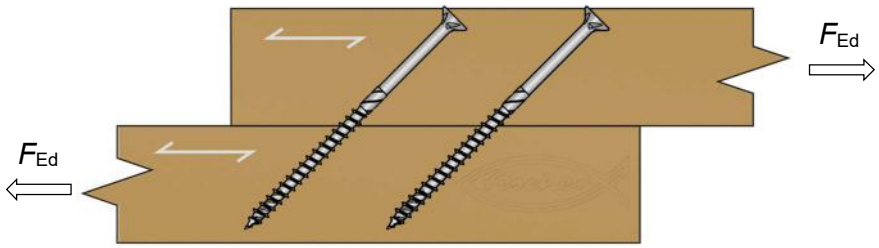

Figure H2.1: Shear connection with inclined screws timber-to-timber connection (figure not to scale)

The load-carrying capacity

$$F_{v,Rk} = \frac{1}{\sqrt{\left(\frac{\cos\alpha}{F_{v,Rk}}\right)^2 + \left(\frac{\sin\alpha}{F_{ax,Rk}}\right)^2}} \tag{66}$$

The slip modulus, see also Annex D20 to D22

$$K_{ser} = K_{v,ser} \cdot \cos\alpha \cdot (\cos\alpha - \mu \cdot \sin\alpha) + K_{ax,ser} \cdot \sin\alpha \cdot (\sin\alpha + \mu \cdot \cos\alpha) \tag{67}$$

For cross coupled screws the friction should not be considered, which leads to

$$K_{ser} = K_{v,ser} \cdot \cos^2\alpha + K_{ax,ser} \cdot \sin^2\alpha \tag{68}$$

Considering the deformations in both parts leads to the total slip modulus

$$K_{v,tot,ser} = \frac{1}{\frac{1}{K_{ax,ser,1}} + \frac{1}{K_{ax,ser,2}}} \tag{69}$$

Where

d	Outer thread diameter of the screw [mm]
$F_{v,Rk}$	Characteristic load-carrying capacity of a screw each shear plane [N]
$F_{ax,Rk}$	Withdrawal capacity of the screw [N], see Annex D
$K_{ax,ser}$	Slip modulus parallel to the screw axis in the serviceability limit state [N/mm]
$K_{v,ser}$	Slip modulus perpendicular to the screw axis in the serviceability limit state [N/mm]
α	Angle between screw axis and grain-direction [°]
μ	Coefficient of friction, if permanent compression forces between the timber elements can be ensured μ = 0,25

Fire Design of PowerFast II screws for the structural use in timber constructions according to EN 1995-1-2

- Connections with side members of timber elements – simplified rules for laterally loaded screws

a) Unprotected connections

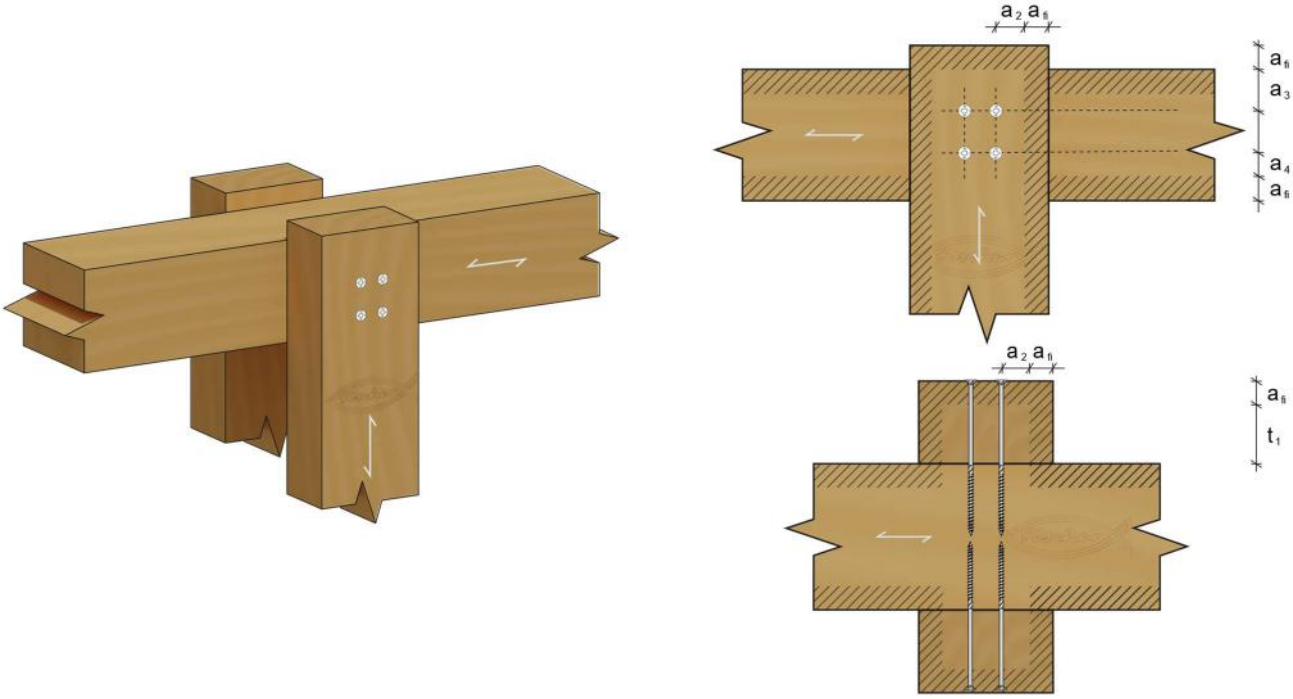

Figure J1.1: Fire design for unprotected screws – laterally loaded (figures not to scale)

The fire resistance of unprotected timber-to-timber joints with screws with $d \geq 3{,}5$ mm where spacing, edge and end distances and side member dimensions comply with minimum requirements given in EN 1995-1-1 have a fire resistance of

$$t_{d,fi} = 15 \text{ min} \tag{70}$$

For connections with non-protruding heads, the fire resistance periods $t_{d,fi}$ can be extended by increasing the following dimensions with a_{fi} to a maximum of 30 minutes.

- The thickness of the side members
- The width of the side members
- The end- and edge distances of the screws

With

$$a_{fi} = 1{,}5 \cdot \beta_n \cdot (t_{req} - t_{d,fi}) \tag{71}$$

Fire Design of PowerFast II screws for the structural use in timber constructions according to EN 1995-1-2

The values for the design notional charring rate β_n under standard fire exposure are given below.

Table J2.1: Notional charring rate

Material	β_n **[mm/min]**
Softwood and beech	
Glued Laminated Timber with a characteristic density of ≥ 290 kg/m³	0,70
Solid Timber with a characteristic density of ≥ 290 kg/m³	0,80
Hardwood	
Solid or Glued Laminated hardwood with a characteristic density of ≥ 290 kg/m³	0,70
Solid or Glued Laminated hardwood with a characteristic density of ≥ 450 kg/m³	0,55
LVL	
LVL with a characteristic density of ≥ 480 kg/m³	0,70

b) Protected connections

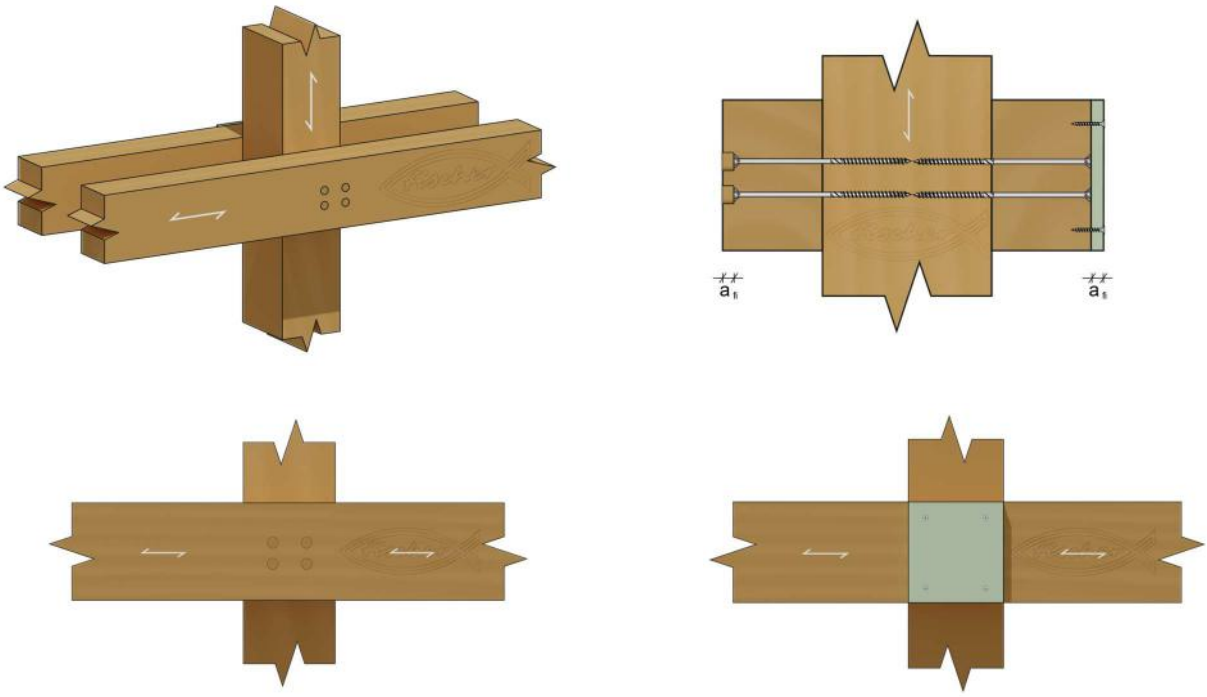

Figure J2.1: Fire design for protected screws – laterally loaded (figures not to scale)

If the construction is protected by the addition of wood panelling, wood-based panels or gypsum plasterboards type *A* or *H* or other fire protection panels with an ETA including fire resistance, the time until start of charring should satisfy

$$t_{ch} \geq t_{req} - 0{,}5 \cdot t_{d,fi} \tag{72}$$

Fire Design of PowerFast II screws for the structural use in timber constructions according to EN 1995-1-2

If the connection is protected by the addition of gypsum plasterboard type *F*, the time until start of charring should satisfy equation (73).

$$t_{ch} \geq t_{req} - 1{,}2 \cdot t_{d,fi} \tag{73}$$

For connections where the screws are protected by glued-in timber plugs, the length of the plugs should be determined according to

$$a_{fi} = 1{,}5 \cdot \beta_n \cdot (t_{req} - t_{d,fi}) \tag{74}$$

The fixings of the additional protection should prevent its premature failure. Additional protection provided by wood-based panels or gypsum plasterboards should remain in place until charring of the member starts ($t = t_{ch}$). Additional protection provided by gypsum plasterboards type *F* should remain in place during the required fire resistance period ($t = t_{req}$).

The following rules apply for the fixing of additional protections by screws:
- The distance between the screws should be not more than 100 mm along the board edges and not more than 300 mm for fastenings within the area of the boards
- The edge distance of fasteners should be equal or greater than a_{fi}, calculated using expression

$$a_{fi} = 1{,}5 \cdot \beta_n \cdot (t_{req} - t_{d,fi}) \tag{75}$$

The penetration depth of the screws for fixing the additional protection made of wood, wood-based panels or gypsum plasterboards type *A* or *H* should be at least $6 \cdot d$.

For gypsum plasterboards type *F*, the penetration length into unburnt wood (that is beyond the char-line) should be at least 10 mm (see also EN 1995-1-2).

Where

a_{fi}	Extra thickness of member to improve the fire resistance [mm]
t_{req}	Required time of fire resistance [min]
$t_{d,fi}$	Time of the fire resistance of the unprotected connection [min]
β_n	Notional charring rate [mm/min]

Fire Design of PowerFast II screws for the structural use in timber constructions according to EN 1995-1-2

- Simplified rules for axially loaded screws

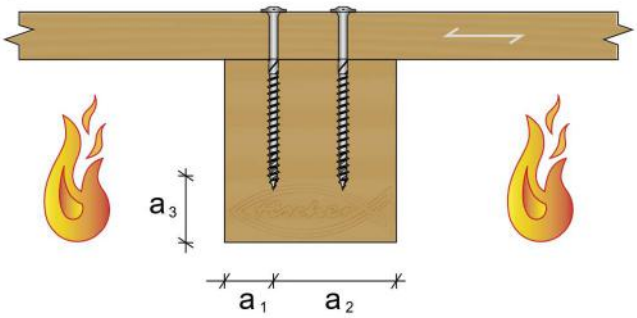

Figure J4.1: Fire design for axially loaded screws (figure not to scale)

For axially loaded screws which are protected from direct fire exposure, the design resistance of the screws should be calculated with

$$F_{ax,d,t,fi} = \eta \cdot \frac{1,05 \cdot F_{ax,Rk}}{\gamma_{M,fi}} \tag{76}$$

For connections where the distances a_2 and a_3 of the screws satisfy the equations (77), the conversion factor η for the reduction of the axial resistance of the screw in the fire situation should be calculated with equation (78).

$$\begin{aligned} a_2 &\geq a_1 + 40 \\ a_3 &\geq a_1 + 20 \end{aligned} \tag{77}$$

$$\eta = \begin{cases} 0 & \text{for } a_1 \leq 0,6 \cdot t_{d,fi} \\ \dfrac{0,44 \cdot a_1 - 0,264 \cdot t_{d,fi}}{0,2 \cdot t_{d,fi} + 5} & \text{for } 0,6 \cdot t_{d,fi} \leq a_1 \leq 0,8 \cdot t_{d,fi} + 5 \\ \dfrac{0,56 \cdot a_1 - 0,36 \cdot t_{d,fi} + 7,32}{0,2 \cdot t_{d,fi} + 23} & \text{for } 0,8 \cdot t_{d,fi} + 5 \leq a_1 \leq t_{d,fi} + 28 \\ 1,0 & \text{for } a_1 \geq t_{d,fi} + 28 \end{cases} \tag{78}$$

Where

a_1, a_2, a_3	Distances and spacing of the screws [mm]
$t_{d,fi}$	Time of the fire resistance of the unprotected connection [min]
$F_{ax,Rk}$	Characteristic withdrawal strength [N]
$F_{ax,d,t,fi}$	Design value of the withdrawal strength in the fire situation [N]
$\gamma_{M,fi}$	Partial factor for timber in the case of fire, see national regulations (in absence of other national regulations, a partial factor for the resistance $\gamma_{M,fi}$=1,0 under fire impact is recommended) [-]
η	Conversion factor for the reduction of the load-bearing capacity in the case of fire [-]

Applications of PowerFast II screws for the structural use in timber constructions

Screw gluing methods

Screw gluing methods are only allowed for the usage in serviceability class 1 and 2 according to EN 1995-1-1

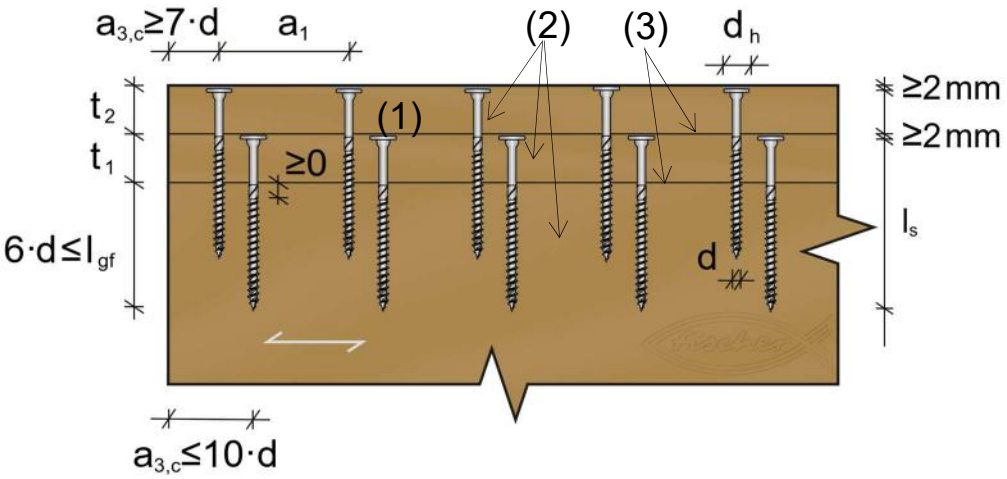

Figure K1.1: Arrangement of screws for screw-gluing (figure not to scale)

Note: The figure above is a vertical section and the distances between each screw row for assembling must be ≥ a_2. For additional layers above, screws must have a distance of at least 3·d in grain direction to screw rows below. For additional information about the configuration see also figures in Annex K2.

Legend

(1)	fischer PowerFast II partial threaded screw	d	Nominal diameter of the screw
(2)	Bonded part	l_s	Screw length
(3)	Glue joint	l_{gf}	Threaded length (l_{gp} for partial-threaded screws)
t_1, t_2	Thickness of the gluing parts	d_h	Head diameter
a_1	Spacing of the screws parallel to the grain in a row	$a_{3,c}$	Distance of the screw to the unloaded end grain

The shown applications for screw-bonding applies only for structures in serviceability class 1 and 2 according to EN 1995-1-1. The use of an adhesive with joint filling properties is necessary. If the joint thickness of a maximum of *0,3* mm can be ensured, adhesives according to EN 15425 and adhesives type I may also be used according to EN 301. The adhesive manufacturer's instructions must be fulfilled. Only »fischer PowerFast II« screws with washer or step countersunk heads (see Annex A5, A6, A8, A9) with a nominal diameter $d \geq 5$ mm should be used.

In the use of partial-threaded screws, no part of the thread should be in the bonded part. When using fully threaded screws, the glued part must be pre-drilled with a borehole of at least $d + 1,0$ mm. The upper side of the screw head or the washer, must be countersunk at least *2* mm from the surface of the glued part. The figure above shows the different options for installing the partial threaded screws of the assembling structural elements.

Applications of PowerFast II screws for the structural use in timber constructions

The minimum spacing for connections with axially loaded screws must be observed. The maximum distance in the adhesive surface to the ends of the components must be $a_{3,c} \leq 10 \cdot d$, and to the edges $a_{4,c} \leq 5 \cdot d$. With a single-row screw connection, the rib width b_{rib} may not be larger than $d_h + 2 \cdot t_1$, otherwise a multi-row screw connection must be carried out.

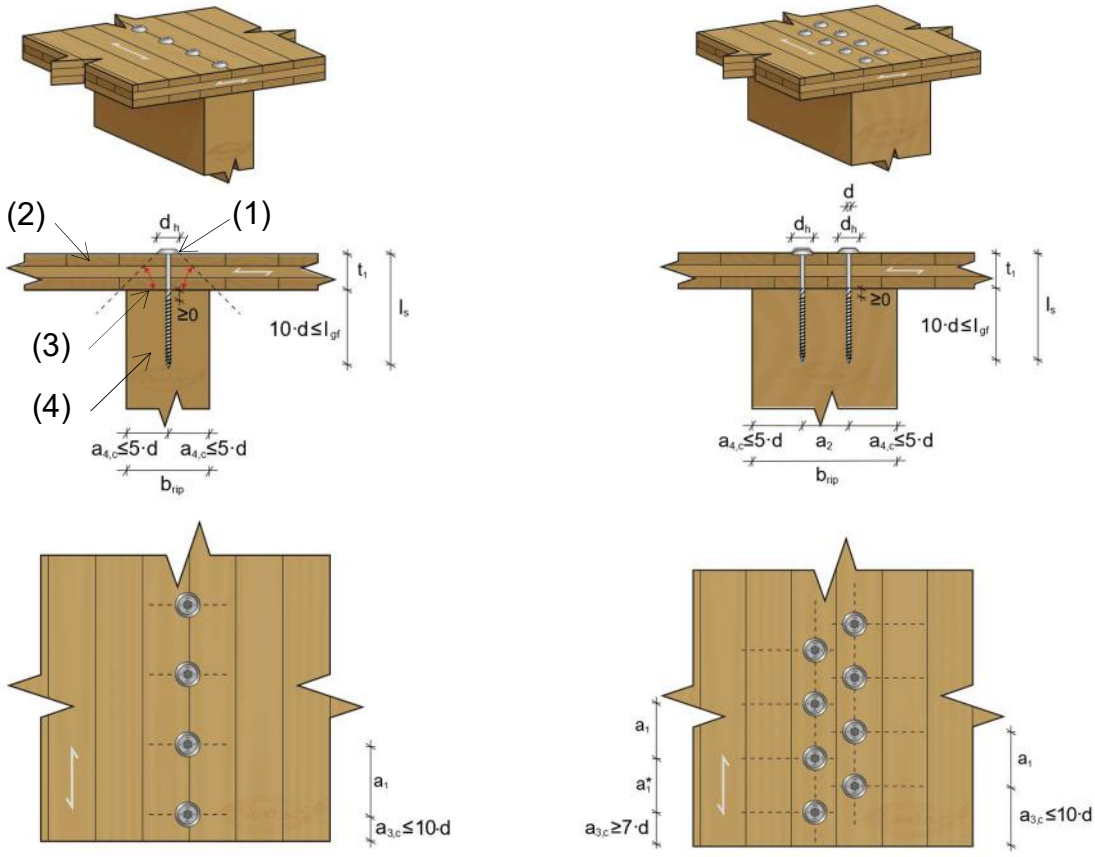

Figure K2.1: Arrangement of screws for screw-gluing of ribbed panels (figure not to scale)

Legend

(1)	Partial threaded screw with washer	$a_{3,c}$	Distance to the unloaded end grain
(2)	Panel	$a_{4,c}$	Distance to the unloaded edge
(3)	Glue joint	d	Nominal diameter of the screw
(4)	Rib (timber beam)	l_s	Screw length
a_1	Spacing of the screws parallel to the grain in a row	t_1	Thickness of the bonded panel
a_1*	Reduced spacing of the screw parallel to the grain in a row to ensure a distance of $a_1/2$ between adjoining screw rows	b_{rip}	Width of the beam web
a_2	Spacing of the screws perpendicular to the grain direction	d_h	Head diameter
		l_{gf}	Threaded length (l_{gp} for partial-threaded screws)

Applications of PowerFast II screws for the structural use in timber constructions

The surfaces of the bonded parts must be suitable for bonding and are in accordance to the requirements of the adhesive manufacturer. In general, the finishes needed to be sanded or smoothed planed and without coatings, dirt, dust and impurities.

The tolerance of the joint thickness of the assembling parts must fulfil the tolerances for
- Beam- and plate-shaped screw-gluing: max. 1 mm per 1 m
- Ribbed panels: max. 2 mm per 2 m

If several layers are glued together, each layer must be screwed-on separately. The screws must be arranged staggered (see also figure Annex K1.1, and figure Annex K2.1 right below), to apply enough pressure in all joints. In the intermediate layers, the screw heads should not protrude the surface of the intermediate layer.

Deformations and movements that lead to damages of the adhesive-joints have to be avoided.
The screw parameters and distances depend on the thickness of the assembling parts, given in the table below.

Table K3.1: Properties of the bonded parts, screw parameters and compressive stress

Material bonded part	Thickness bonded part [mm]	Recommended nominal diameter [mm]	Min. nominal head diameter [mm]	Maximum screw spacings: Parallel to the grain direction of the outer layer [mm]	Maximum screw spacings: Perpendicular to the grain direction of the outer layer [mm]	Length of the threaded screw part in the structural part [mm]	Calculated compressive stress $p_{cal,min}$ [N/mm²]
Beam- and panel shaped screw-gluing							
LVL of softwood, three-layered solid timber panel, OSB	$12 \le t < 19$	≥ 5 e.g. Annex A5, A6, A8, A9	9,8	100	65	6·*d*	0,10
LVL beech				100	100	8·*d*	
Lamellas and one-layered solid timber panels	$19 \le t < 27$	≥ 6 e.g. Annex A5, A6, A8, A9	10,8	140	65	6·*d*	
LVL in spruce three-layered solid timber panel, OSB			Washer, e.g. Annex A13	140	90	6·*d*	
LVL beech			10,8	140	140	8·*d*	
SWB, PLY-c, OSB, LVL	$27 \le t < 42$	≥ 8 e.g. Annex A8, A9	19,2	175	100	6·*d*	0,15
PLY-beech				175	175	15·*d*	
3-layered SWB panel, LVL	$42 \le t \le 60$	≥ 8 e.g. Annex A8, A9	19,2	225	100	6·*d*	
PLY-beech				250	250	15·*d*	
Ripped Panels							
CLT with GLT	$60 \le t_{CL} < 100$	≥ 8 e.g. Annex A7 with Washer A13 + (EN ISO 7094)	30	225	160	10·*d*	0,18
	$100 \le t_{CL} \le 200$		45	250	200	15·*d*	0,25

Applications of PowerFast II screws for the structural use in timber constructions

As an alternative to the specifications in the Table K3.1, the maximum screw spacing can also be determined with the empirical equation (79).

$$a_{i,max} = 3{,}35 \cdot \sqrt[4]{E_{mean,i} \cdot I_{i,b=1}} \tag{79}$$

with *i = 1* or *2*

In addition, it must be proven, that the calculated minimum compressive stress per screw is observed.

$$\frac{F_{ax,Rd}}{a_1 \cdot a_2} \geq p_{cal,min} \tag{80}$$

Where

$a_{i,max}$	Maximum spacing of the screws in i-direction [mm]
$I_{i.b=1}$	Moment of inertia in *i*-direction for a width of 1 mm of the bonded part [mm^4]
$E_{mean,i}$	Modulus of elasticity in i-direction of the bonded part [N/mm²]
$a_{i,max}$	Maximum spacing of the screws [mm]
$F_{ax,Rd}$	Design withdrawal strength of the screw [N]
$p_{cal,min}$	Minimum calculated compressive stress according to Annex K3

For the characteristic head pull-through parameter $f_{head,k}$ the following models can be used:

- Screws with glued parts made of solid timber and wood-based materials in softwood with

$$f_{head,k} = 14 \cdot d_h^{-0{,}14} \cdot \left(\frac{\rho_k}{\rho_a}\right)^{0{,}8} \tag{81}$$

- Screws with glued parts made of LVL in beech with

$$f_{head,k} = 25 \text{ N/mm}^2 \tag{82}$$

For the decrease in the pressure until the adhesive hardens, one should consider in the calculation model with k_{mod} = *1,0* and γ_M = *1,3*. Table in K3.1 is based on these model assumptions. After the required bond strength has been reached, the screws can be unscrewed.

Applications of PowerFast II screws for the structural use in timber constructions

Supporting plates to restrain screw heads
Metric screws with hexagon head, countersunk head or cylindric head or threaded rods with nut and washer – each according to the structural requirements – at least 2 x M8 (≥ 4.6 respectively A2-50) for the connection of the two plates made of aluminium (mechanical properties at least like e.g. EN AW 6082, EN AW 5083, EN AW 6060 or EN AC-44100); made of carbon steel or made of stainless steel (each at least S235).

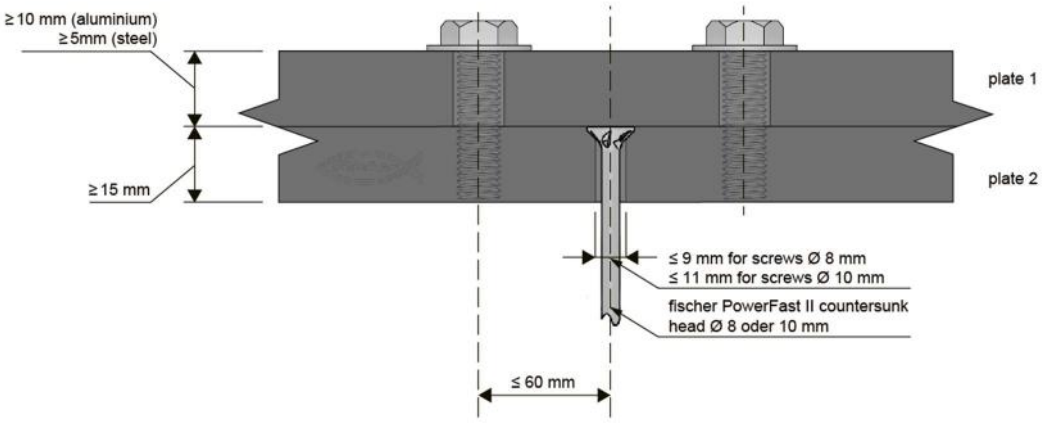

Figure L1.1: Screw head supporting plate for fischer PowerFast II screws (figure not to scale)

For screws loaded in compression which are not completely embedded in timber, values from Table L1.1 can be used for the critical buckling load in combination with screw head supporting plates shown in Figure L1.1.

Table L1.1: Design buckling capacities $F_{b,Rd}$ in [kN] for screws with a free screw length protruding from the timber member including the screw head and the screw fixed between two metal plates where distortion and displacement of the screw head perpendicular to the buckling loads of the screw head are not possible, referred to a minimum gross density of the timber member of 350 kg/m³ and a partial factor of $\gamma_{M,1}$=1,1

Free screw length protruding from the timber member including the screw head [mm]	Nominal diameter [mm]	
	8,0	10,0
≤ 120[1)]	11,12	18,52
140	8,91	15,26
160	7,23	12,62
180	5,96	10,53
200	4,98	8,87
220	4,21	7,56
240	3,61	6,51
260	3,12	5,65
280	2,73	4,96
300	2,40	4,38

[1)] For free screw lengths ≤ 120 mm, buckling is not decisive